THE BETAMAX COMBO

FLOUR TORTILLA MACHINE

- Energy Efficient and Easy to Operate!
- The Ultimate in Display Cooking!
- Optional Dough Trolley Loader!
- A Unique Machine offering Versatility and Consistency!

MODEL 20 OVEN SPEC

120 or 240 Volts
3.0 Amps
Cycles/Phase: 60HZ/Single
Natural Gas: 100,000 BTU's
Dimensions vary with conveyor length
Conveyor Lengths: 30", 42", 60"
Conveyor Lengths: 77 cm, 107 cm, 153 cm
Weight: Approx. 830 lbs./377 Kg
Tortilla Production: Up to 900 per hour
Tortilla Diameter: 4" to 12"

*Tortilla production may vary due to operator experience,diameter and thickness of tortillas.

Receptacle: NEMA 5-20P (125V ~)

Receptacle: NEMA 5-20R (125V ~)

Receptacle: NEMA 6-20P (250V ~)

Receptacle: NEMA 6-20R (250V ~)

MODEL 12 PRESS SPEC

220 or 240 Volts
23.4 Amps
Cycles/Phase: 60HZ/Single
Dimensions: L26" X W 18" X H25.75"
Dimensions (Metric): 66cm x 46cm x 66cm
Shipping Weight: Approx. 200 lbs.

Plug: NEMA 10-50P (250V ~)

Receptacle: NEMA 10-50R (250V ~)

*BE&SCO equipment is solely intended for use in a commercial facility.

BE&SCO MANUFACTURING®
200 Lombrano St · San Antonio, TX 78207 USA
Office: (210) 734-5124 · Fax: (210) 737-3925
Toll Free: 1-800-683-0928
Email: sales@bescomfg.com · Website: www.bescomfg.com
Visit our website to view video www.bescomfg.com

NSF
Intertek

Certifications Applicable to Press and Oven Only
Certifications Not Applicable to Stands

Revised: 03/04/2020

Betamax Combo, Straight Exit - Model: 20

(Shown with DTL and 30” Exit Conveyor)

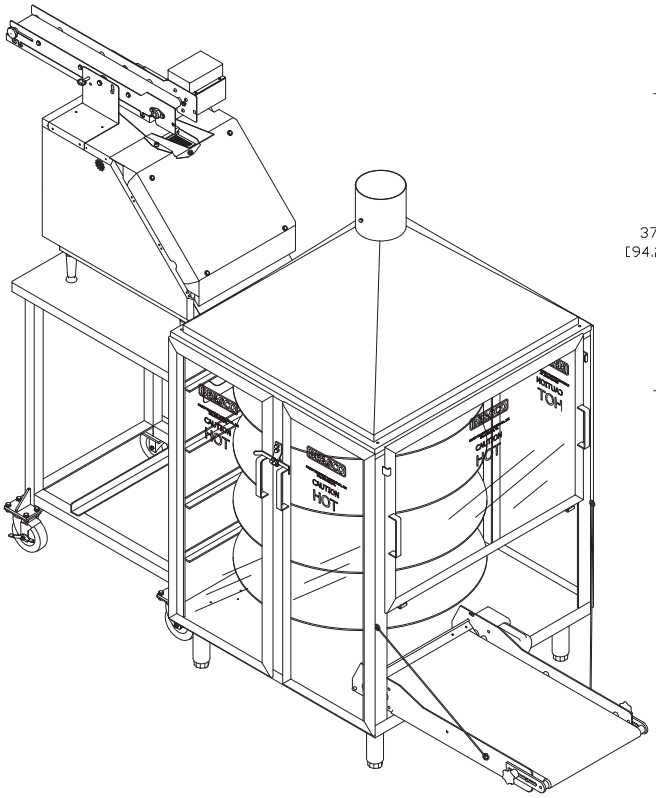

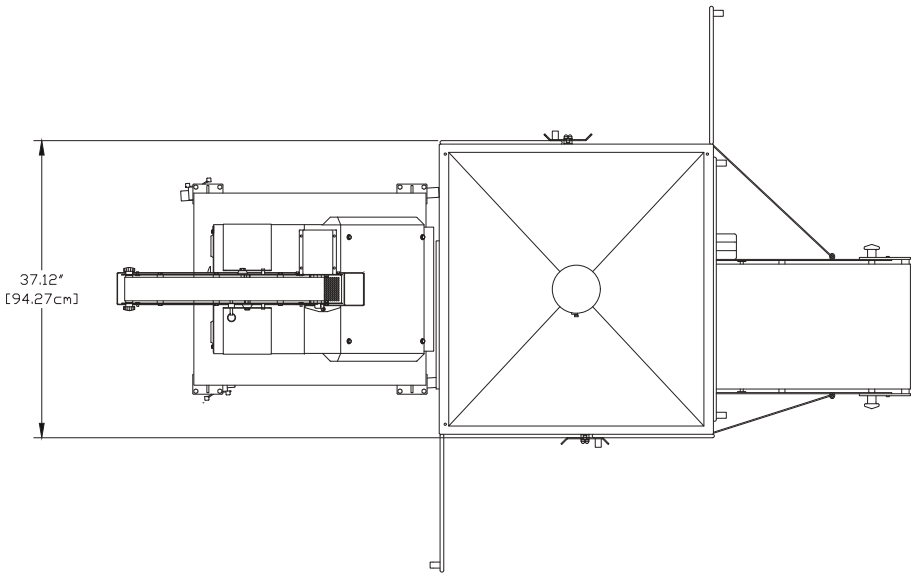

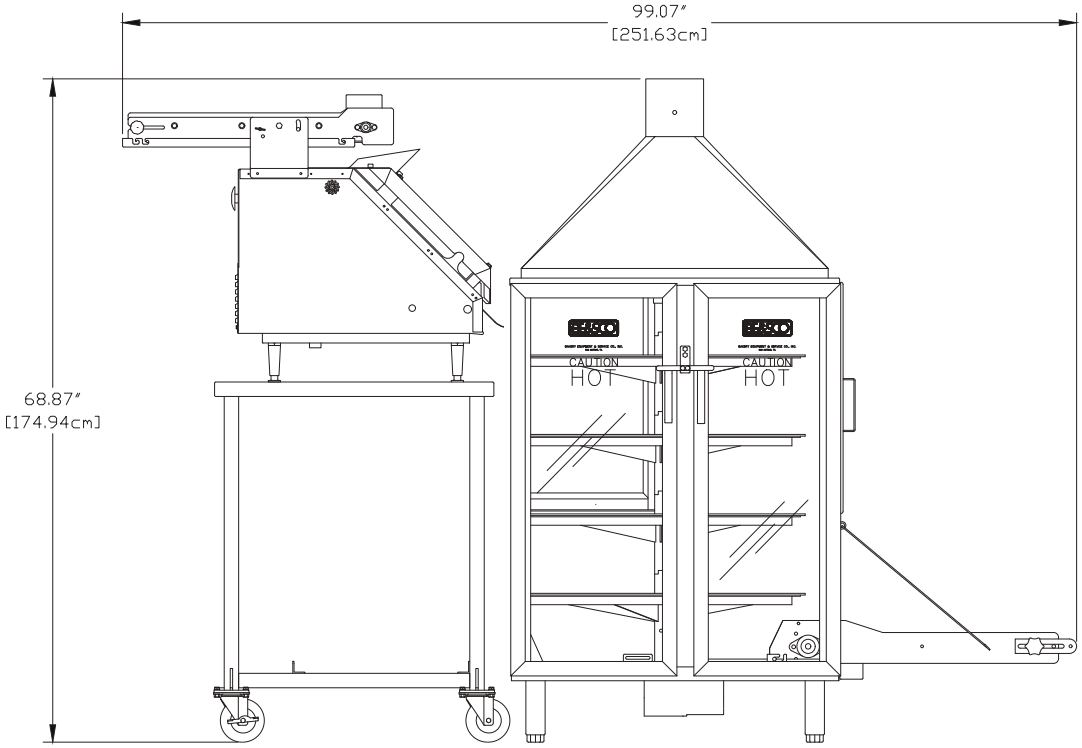

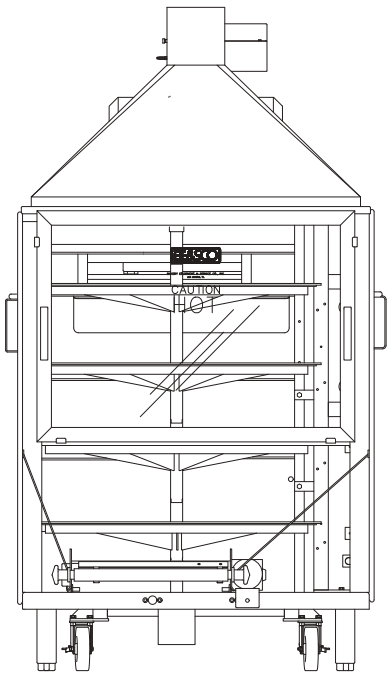

Betamax Combo, Straight Exit - Model: 20

(Shown with DTL and 42” Exit Conveyor)

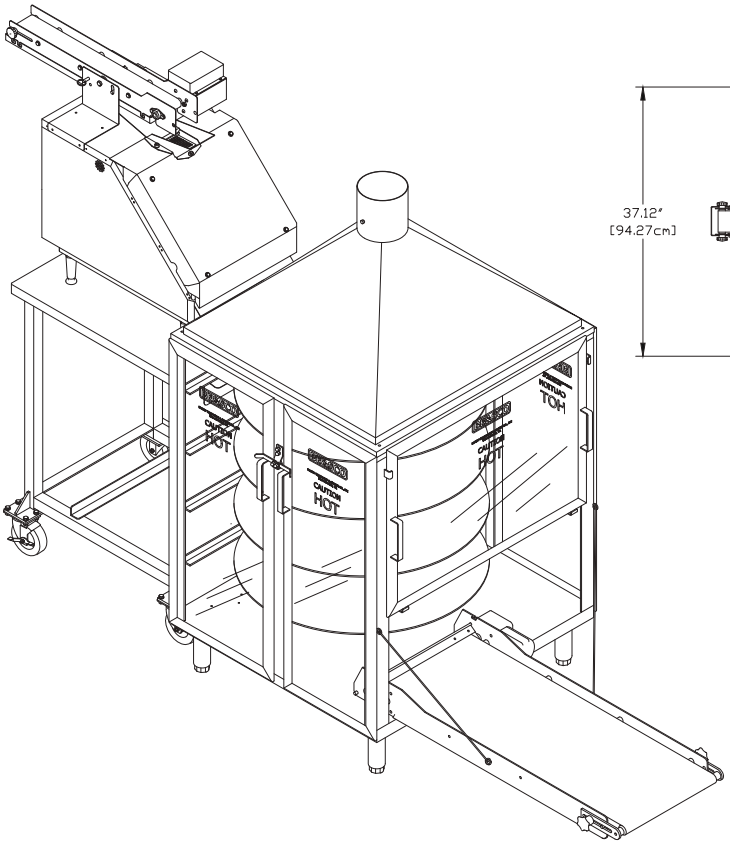

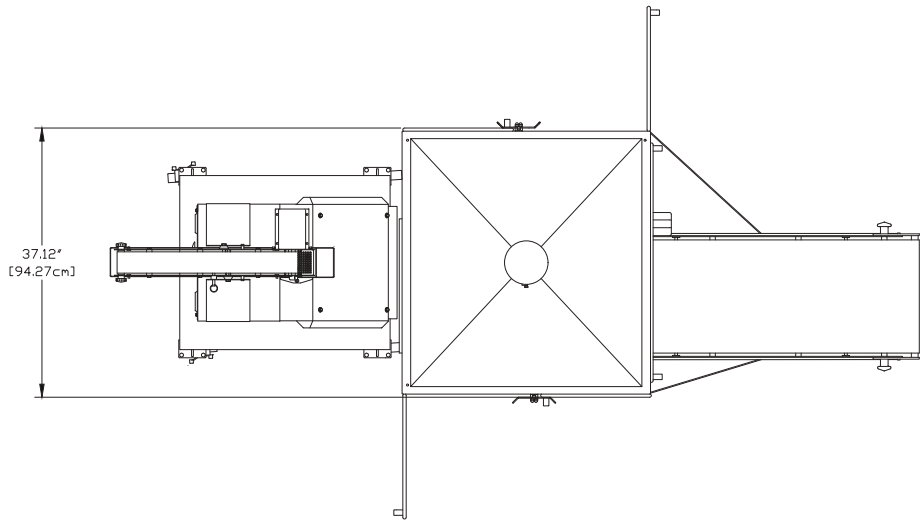

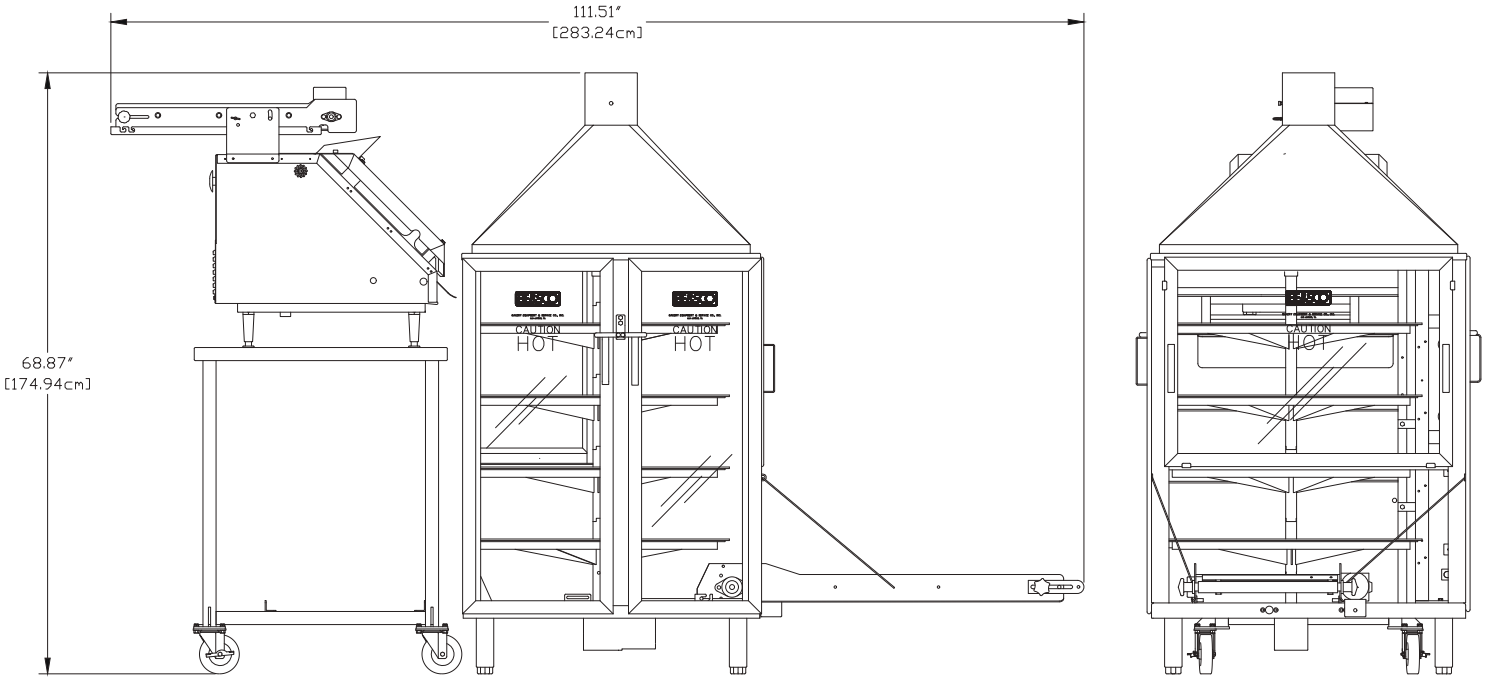

Betamax Combo, Straight Exit - Model: 20

(Shown with DTL and 60” Exit Conveyor)

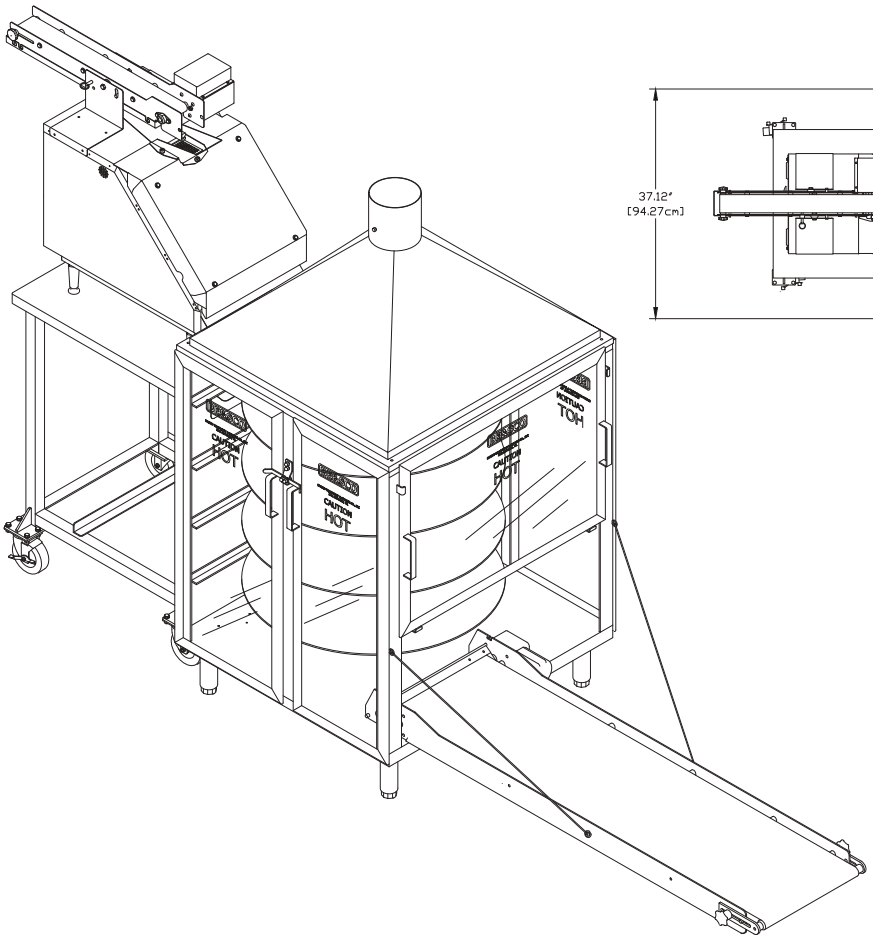

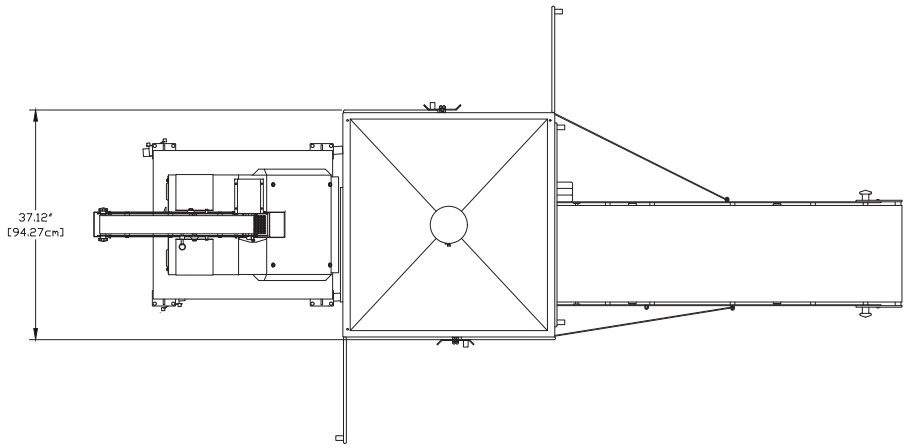

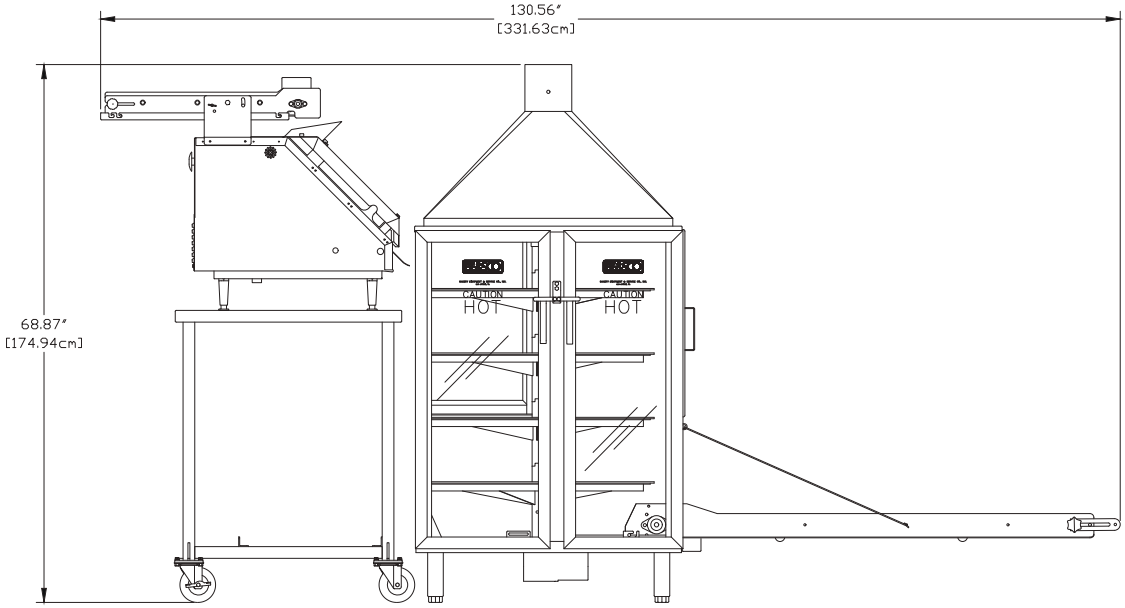

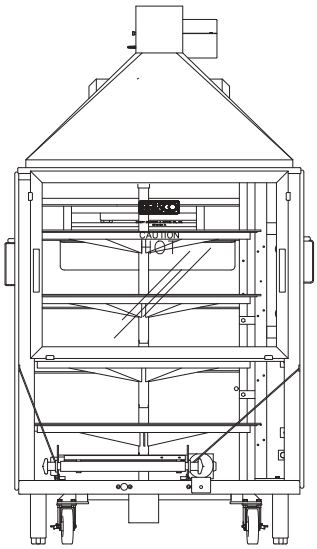

Betamax Combo, Left Exit - Model: 20L

(Shown with DTL and 30” Exit Conveyor)

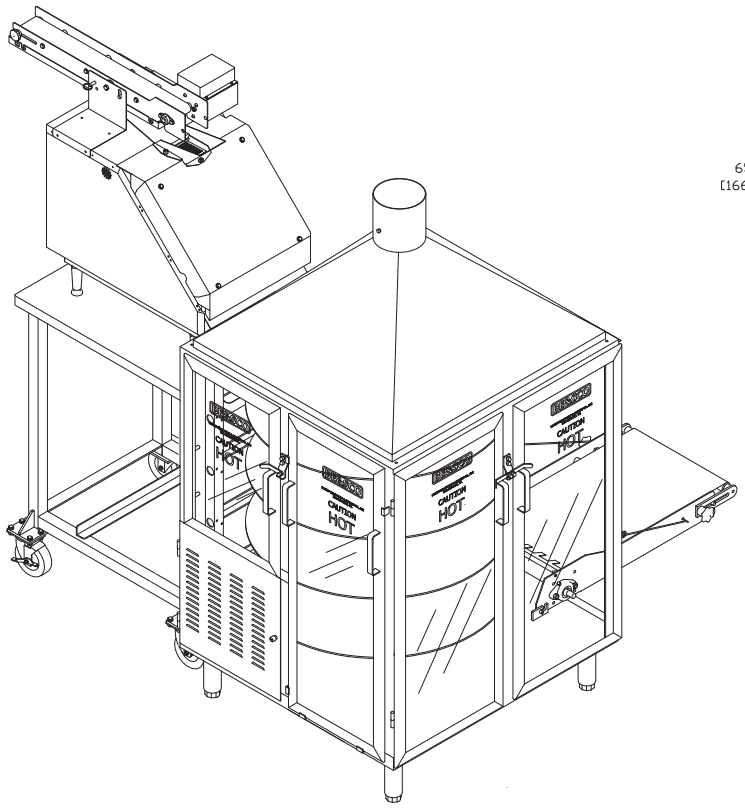

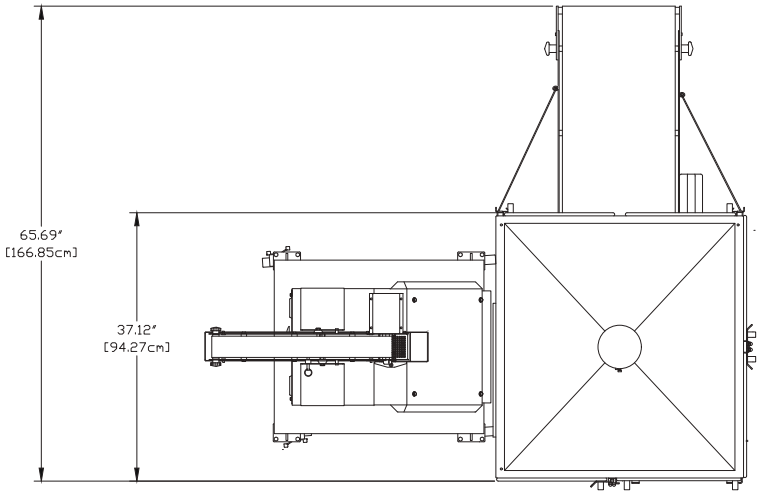

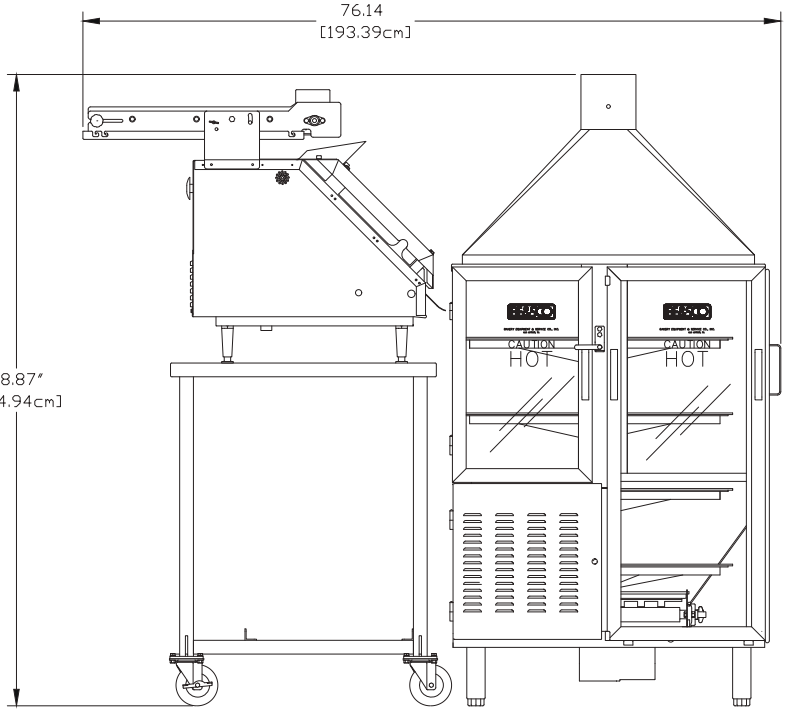

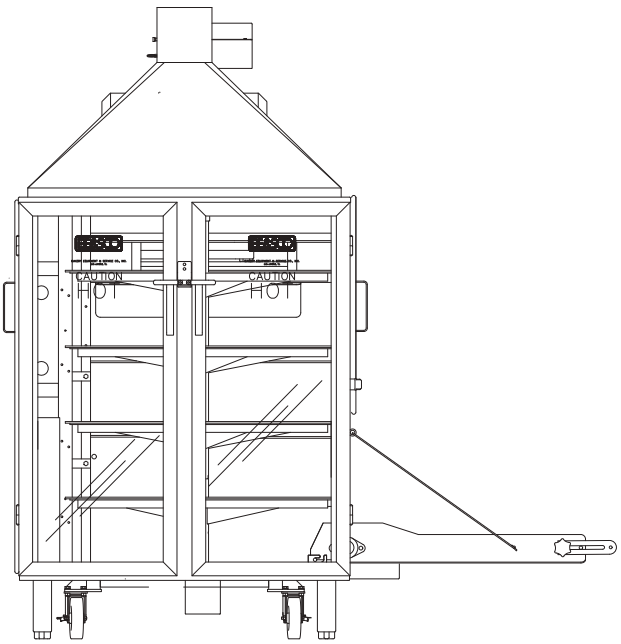

Betamax Combo, Left Exit - Model: 20L

(Shown with DTL and 42” Exit Conveyor)

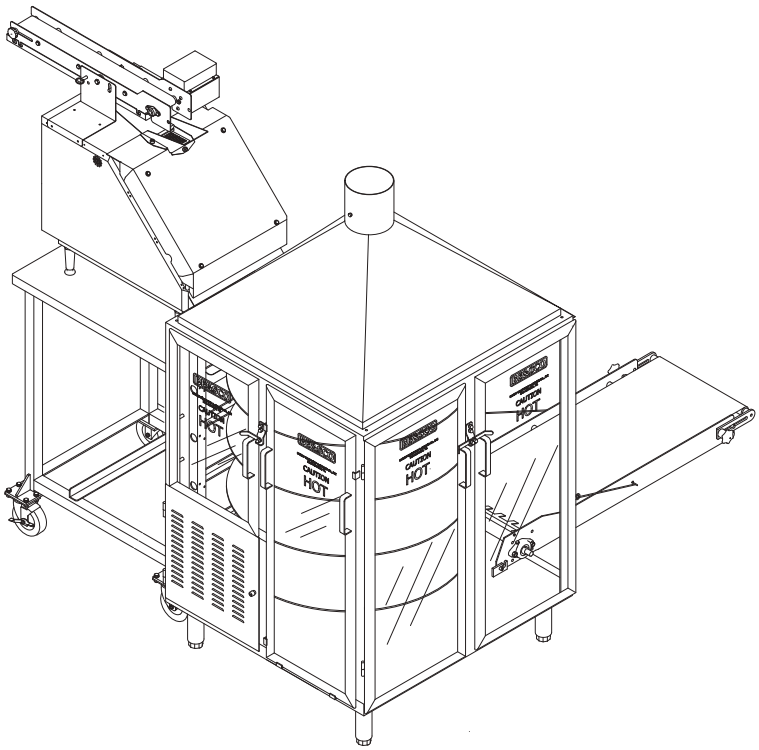

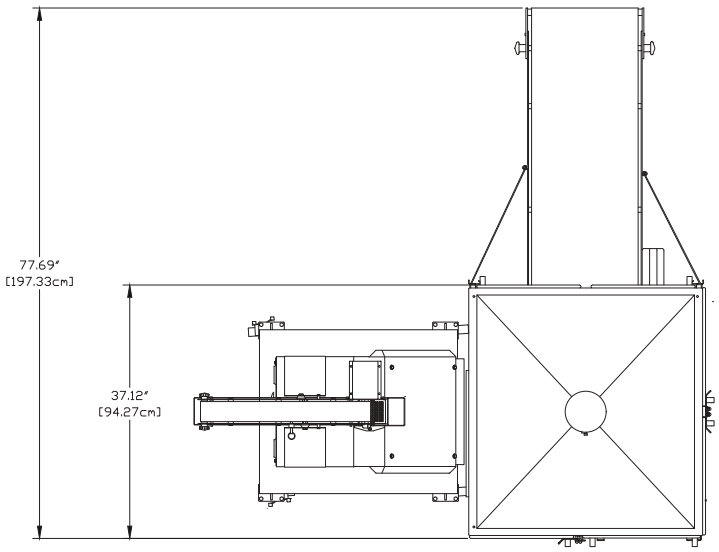

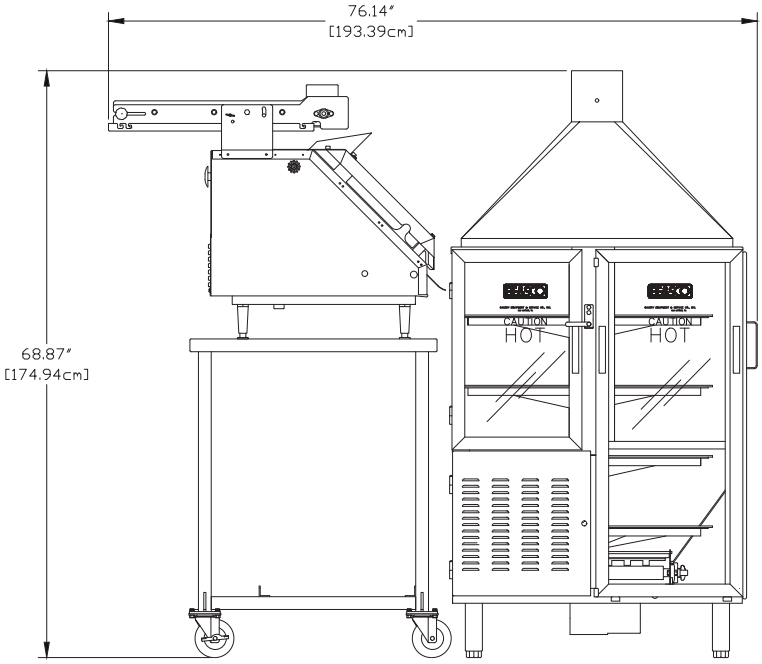

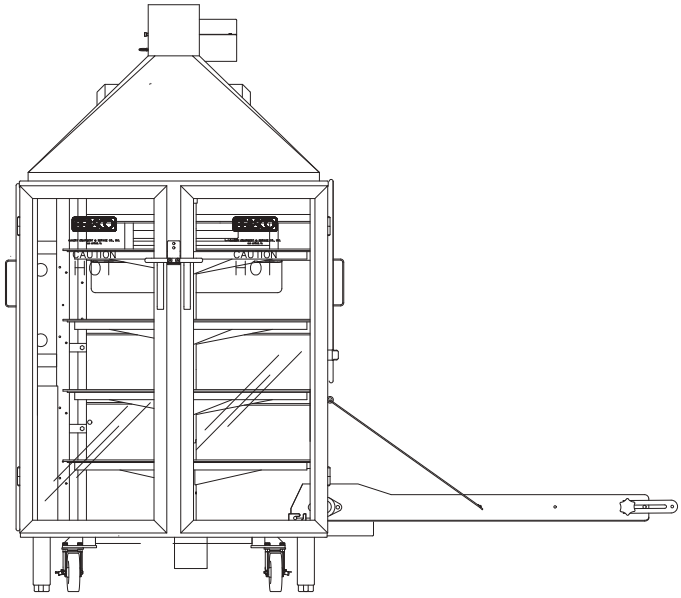

Betamax Combo, Left Exit - Model: 20L

(Shown with DTL and 60” Exit Conveyor)

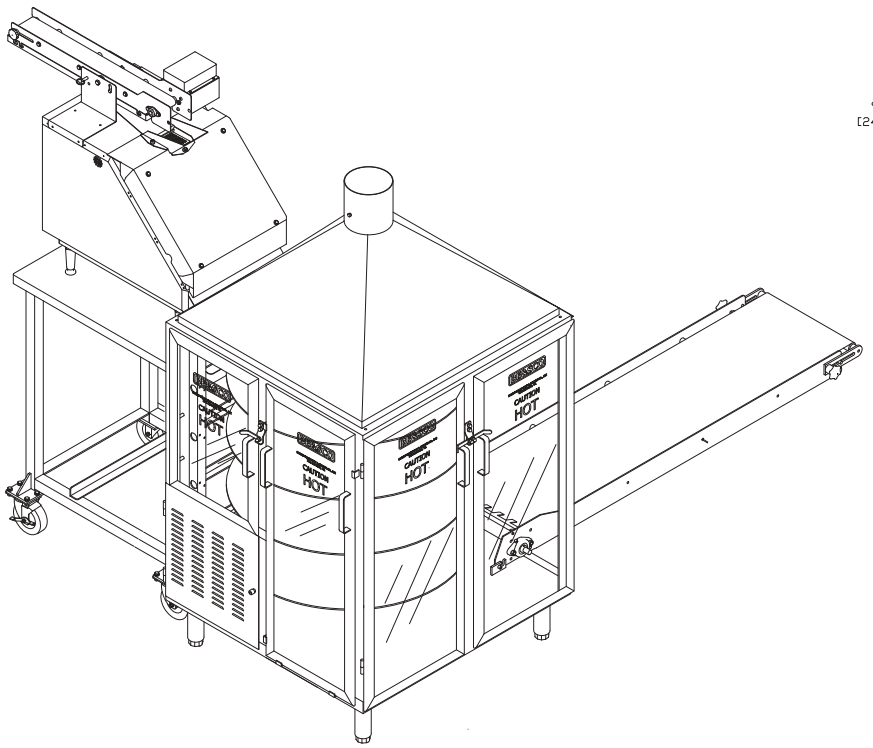

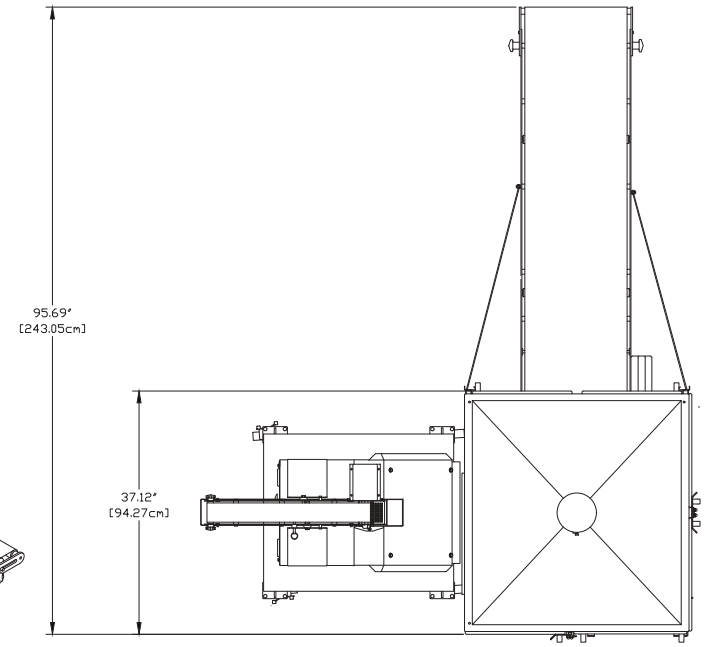

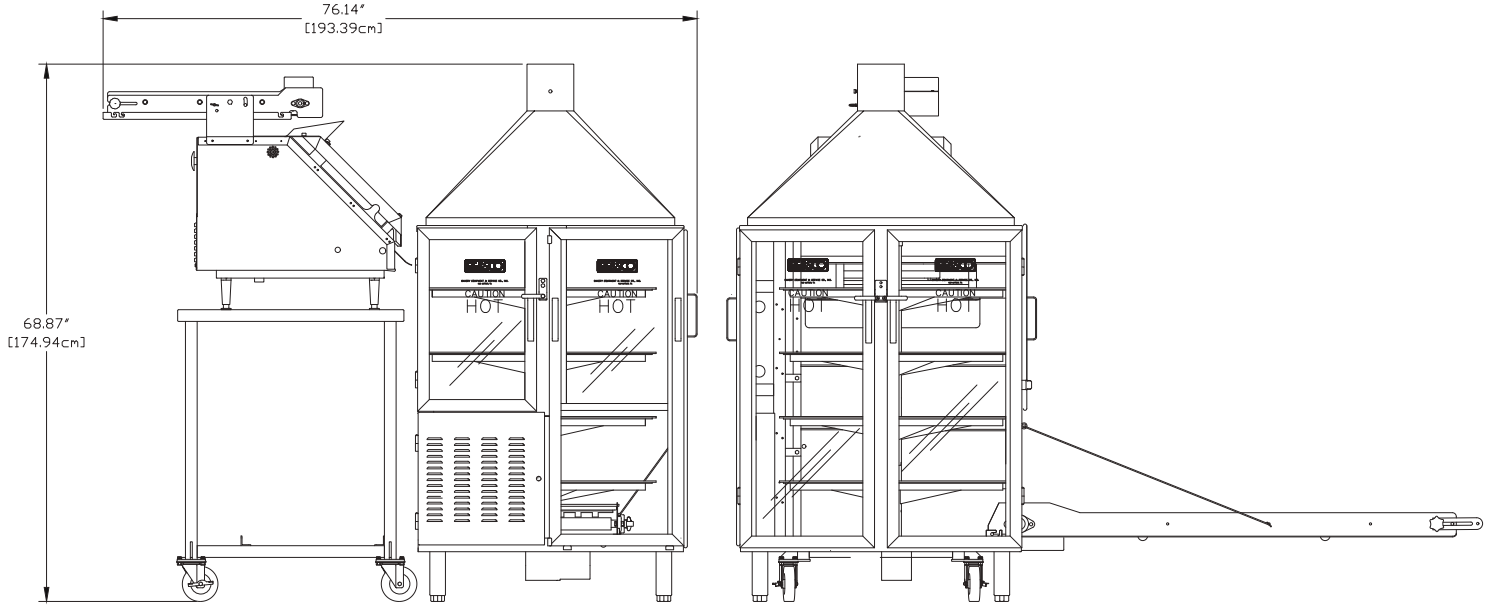

Betamax Combo, Right Exit - Model: 20R

(Shown with DTL and 30” Exit Conveyor)

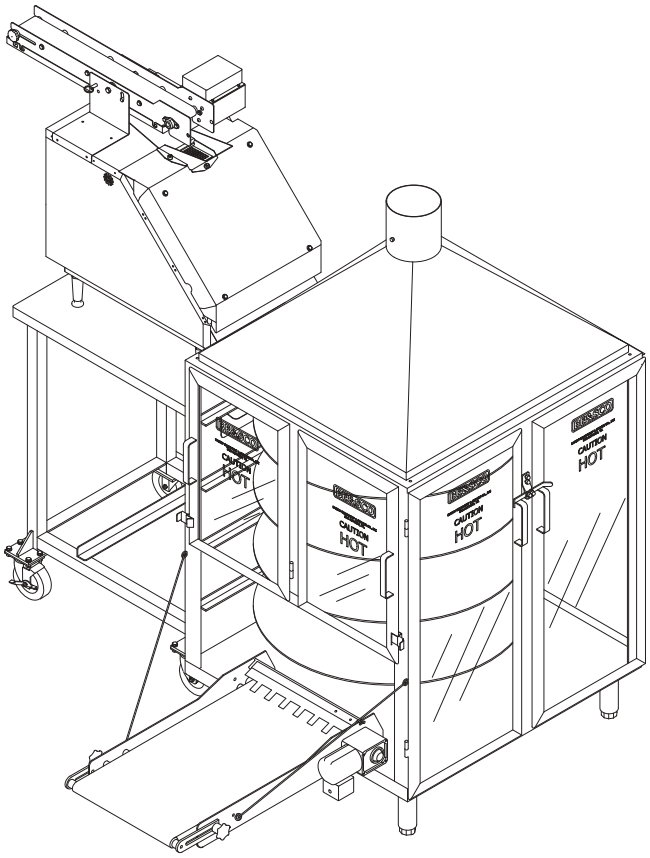

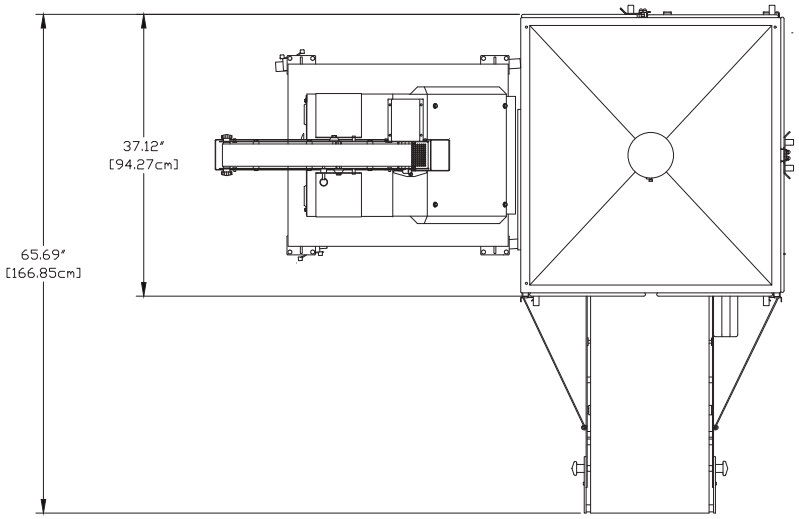

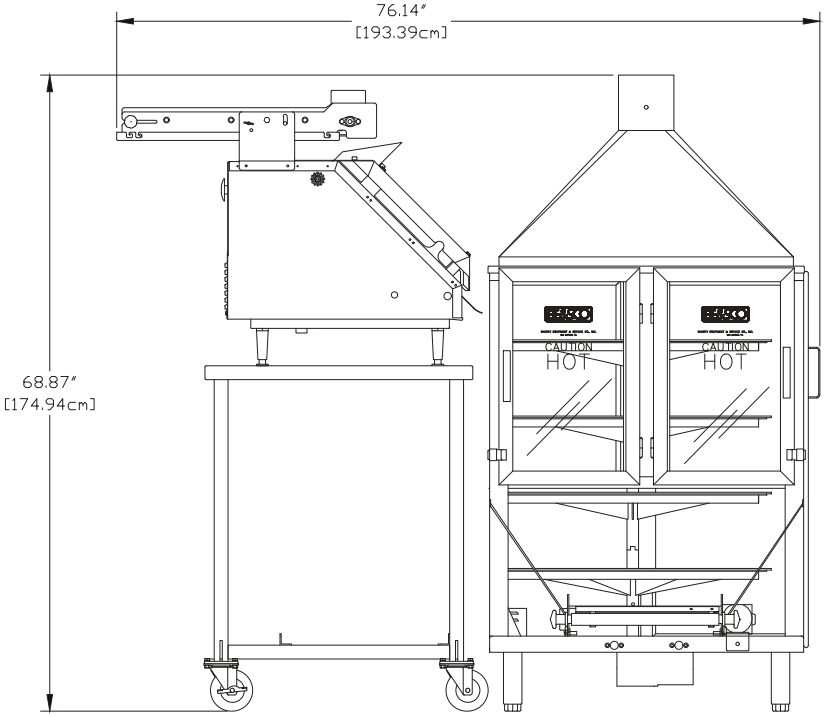

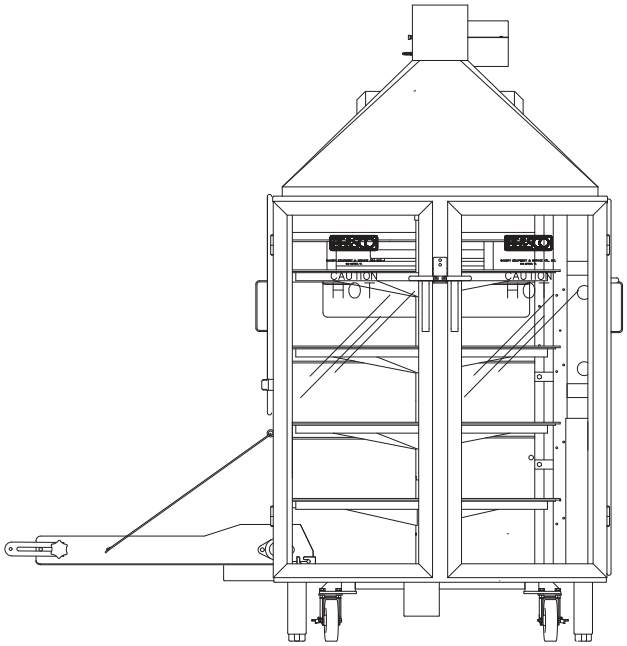

Betamax Combo, Right Exit - Model: 20R

(Shown with DTL and 42” Exit Conveyor)

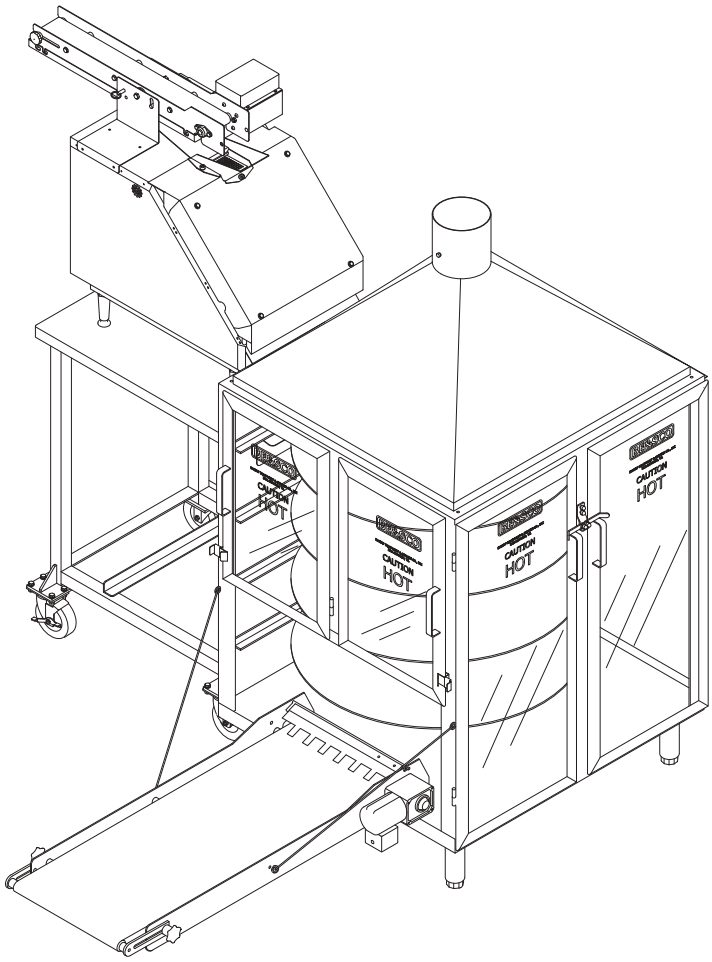

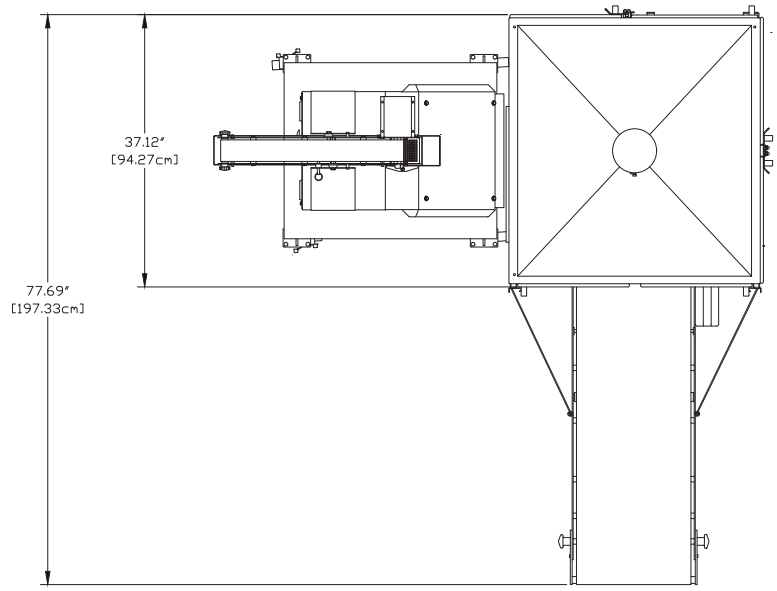

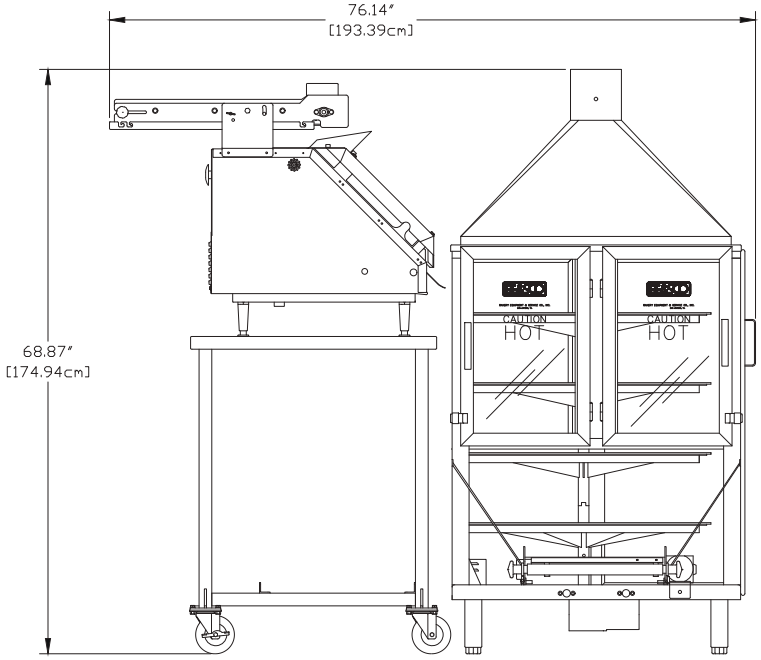

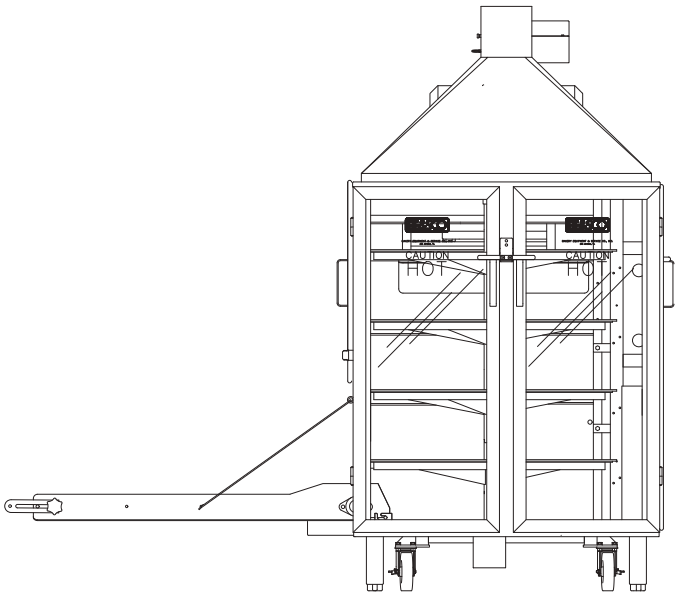

Betamax Combo, Right Exit - Model: 20R
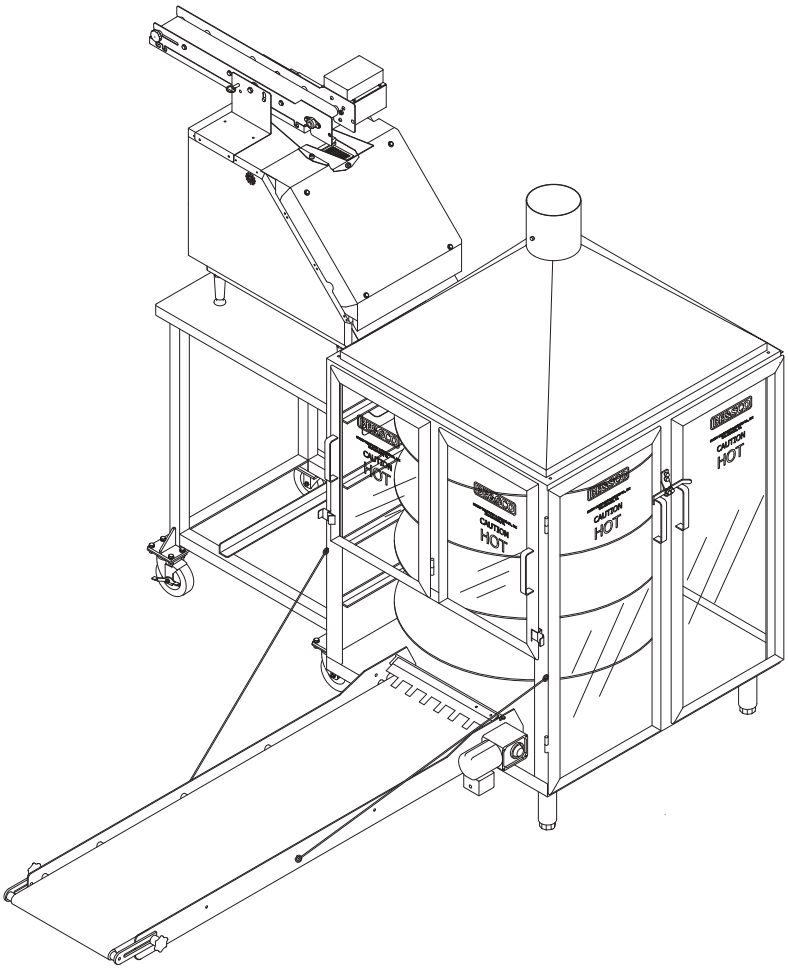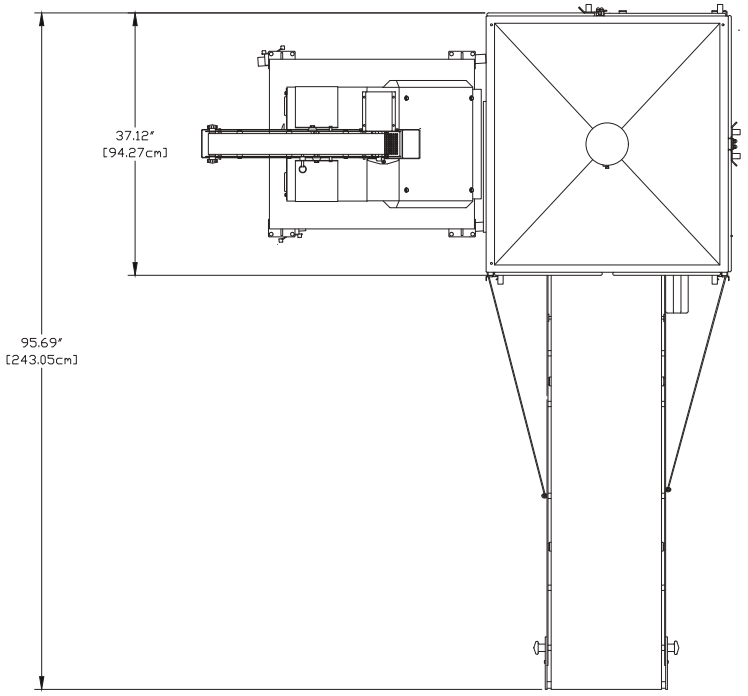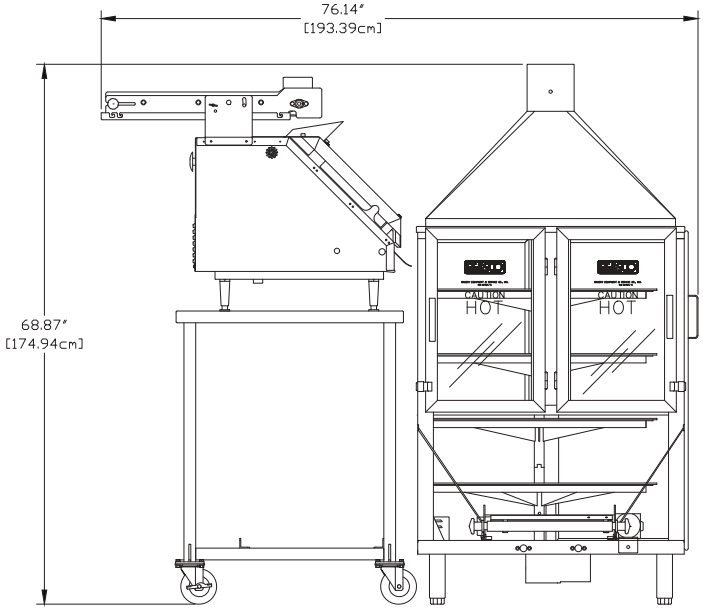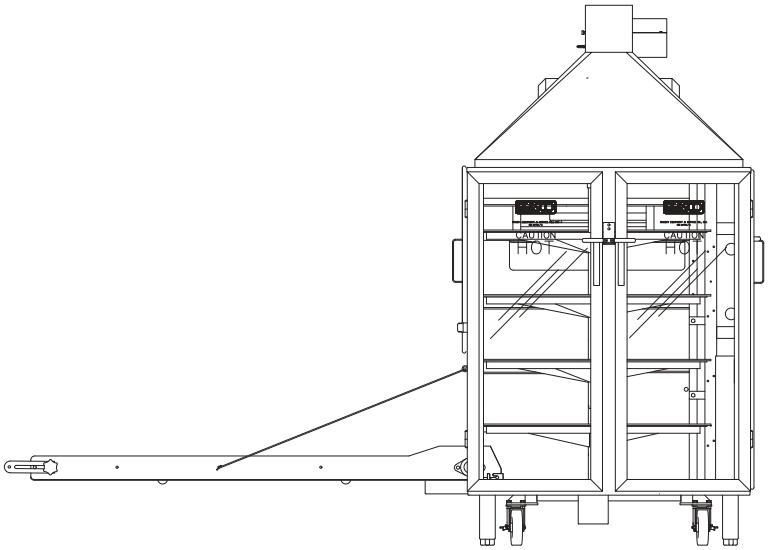
(Shown with DTL and 60” Exit Conveyor)