REVISION HISTORY			
REV	DESCRIPTION	DATE	APPROVED
-	Engineering Release	01/01/2020	Todd Stone

The sink option as shown is for direct connection to a pressurized water supply. If not connecting directly to a pressurized water supply, the IBILC-SK-WBS built in cabinet option is available with removable fresh and waste water tanks. It is also supplied with an electric water pump to draw water from the freshwater tank to the faucet.

Standard faucet shown. Cabinet will support other faucet options

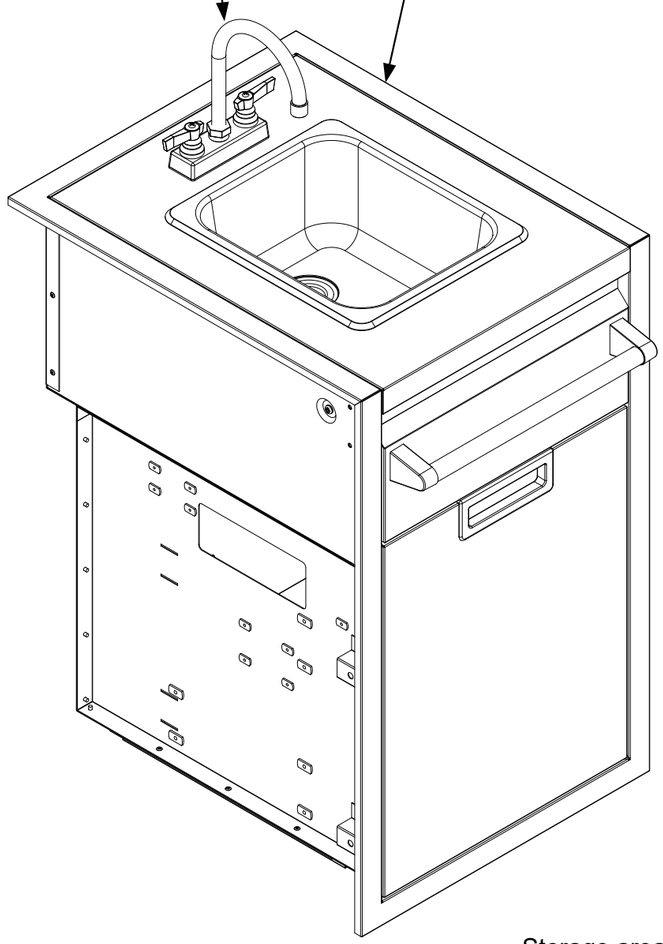

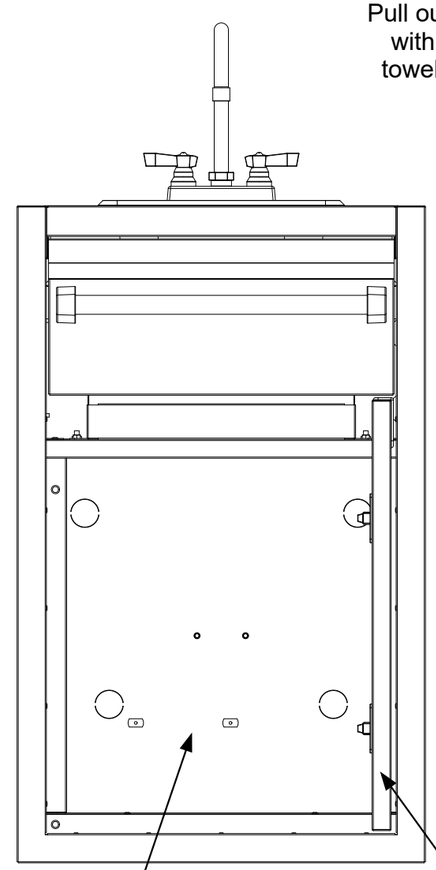

Pull out drawer with paper towel holder

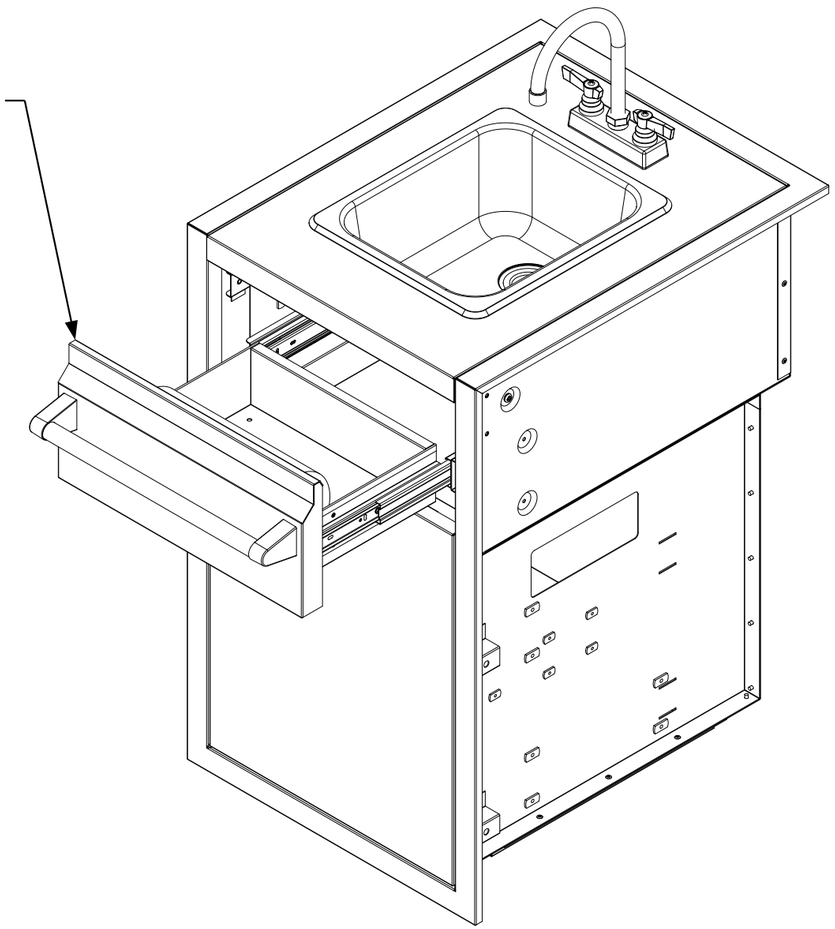

Door shown with righthand mounting option. Door hardware can be switched for a lefthand mount.

Storage area below the sink. Optional drawer configurations are available at the time of ordering or can be installed at a later date.

Suggested Cut-out Dimensions	
Height	33.000
Width	19.125
Depth	24.750
Material	SS 304

Dimensions are in inches
Linear Tolerance: +/- .015
Bend Tolerance: +/- .020
Angular Tolerance: +/- 0.5
Radial Tolerance: +/-.005

DRAWN BY: Todd Stone

CROWN VERITY
37 Adams Blvd., Brantford, Ontario, N3S 7V8
P: (519) 751-1800 www.crownverity.com

TITLE: Infinite Built-In Sink Cabinet

SIZE	Customer	DWG NO	REV
B	Crown Verity	IBISC-SK-XX	-

SCALE 1:8 | 01/01/2020 | SHEET 1 of 3

Copyright 2020 Crown Verity Inc. All rights reserved. Unauthorized duplication is a violation of applicable laws.

REVISION HISTORY			
REV	DESCRIPTION	DATE	APPROVED
-	Engineering Release	01/01/2020	Todd Stone

Dimensions shown are the actual physical dimensions. Additional clearances to the cabinetry are dependent on the tolerances of the cut-out. The suggested cut-out dimensions are listed in the chart below but these dimensions can be reduced if the tolerances are controlled. Please refer to the product manual for installation instructions.

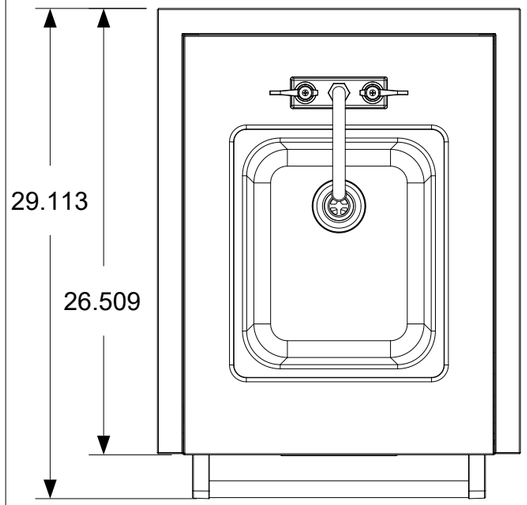

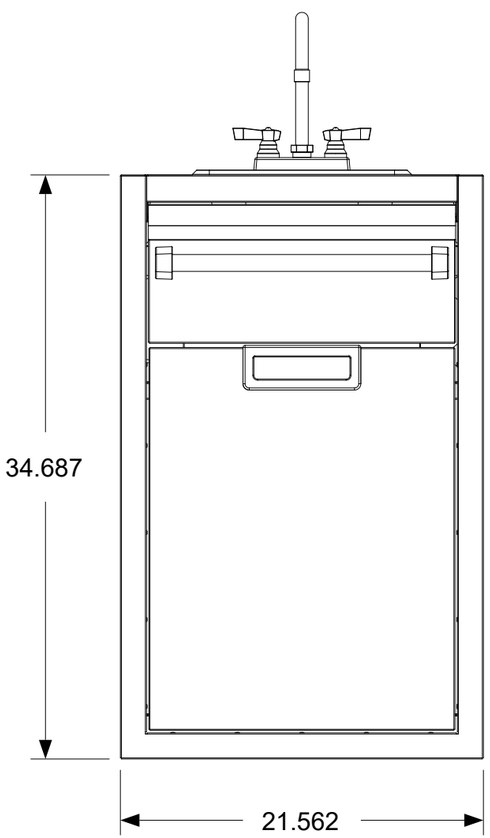

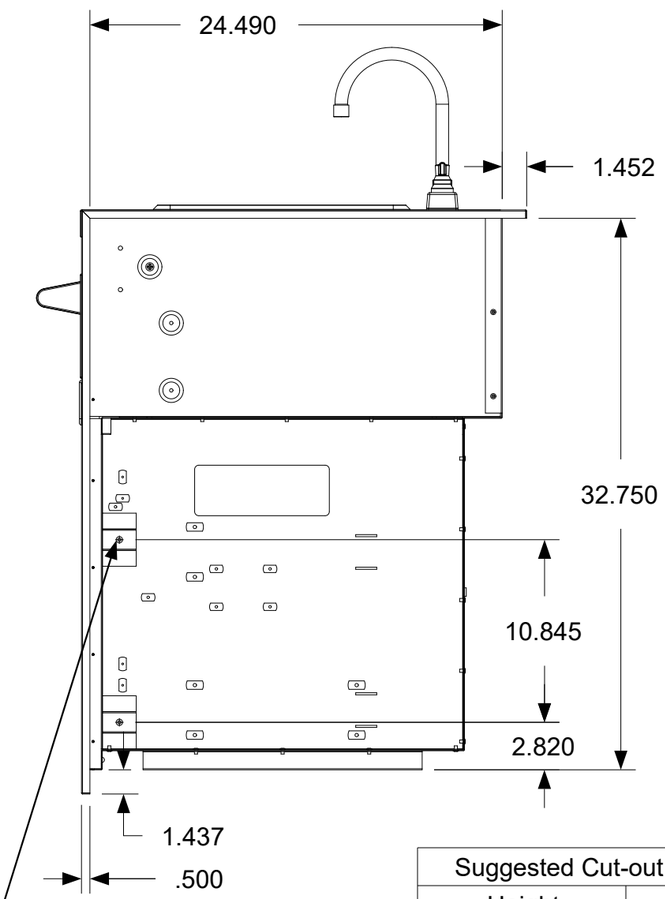

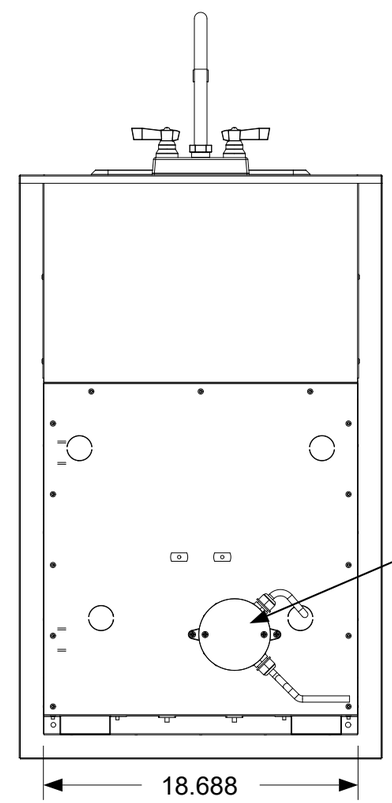

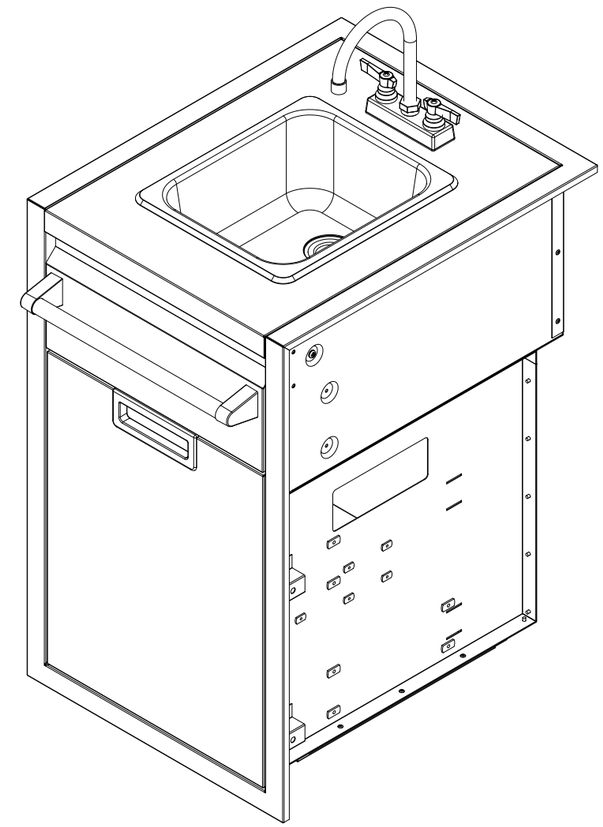

Junction box for electrical connections. Supplied with all hot water tank options and for the non pressurized cold water versions to power the water pump.

Through hole mounting points for cabinet installation.

Suggested Cut-out Dimensions	
Height	33.000
Width	19.125
Depth	24.750
Material	SS 304

Dimensions are in inches
Linear Tolerance: +/- .015
Bend Tolerance: +/- .020
Angular Tolerance: +/- 0.5
Radial Tolerance: +/-.005

DRAWN BY: Todd Stone

CROWN VERITY
37 Adams Blvd., Brantford, Ontario, N3S 7V8
P: (519) 751-1800 www.crownverity.com

TITLE: Infinite Built-In Sink Cabinet

SIZE	Customer	DWG NO	REV
B	Crown Verity	IBISC-SK-XX	-

SCALE 1:9 | 01/01/2020 | SHEET 2 of 3

Copyright 2020 Crown Verity Inc. All rights reserved. Unauthorized duplication is a violation of applicable laws.

REVISION HISTORY			
REV	DESCRIPTION	DATE	APPROVED
-	Engineering Release	01/01/2020	Todd Stone

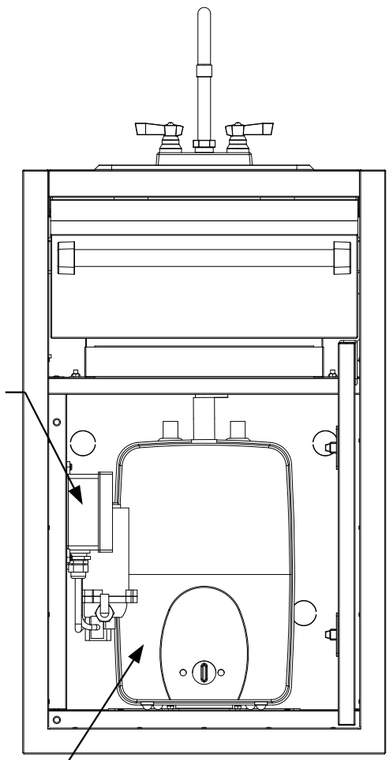

Storage area below the built-in sink shown with optional hot water tank IBISC-SK-WH

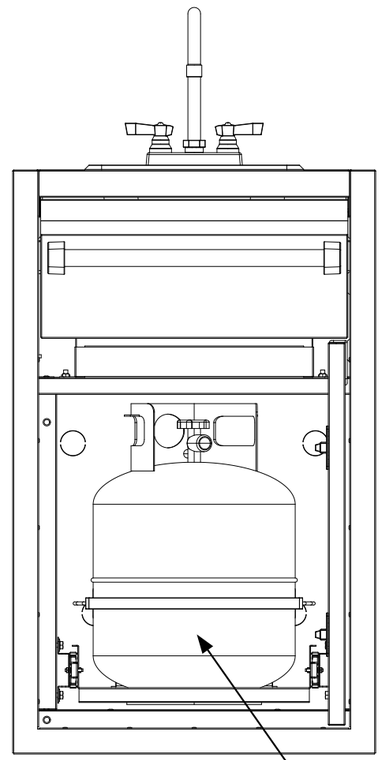

Storage area below the built-in sink shown with optional propane tank drawer IBISC-SK-PH

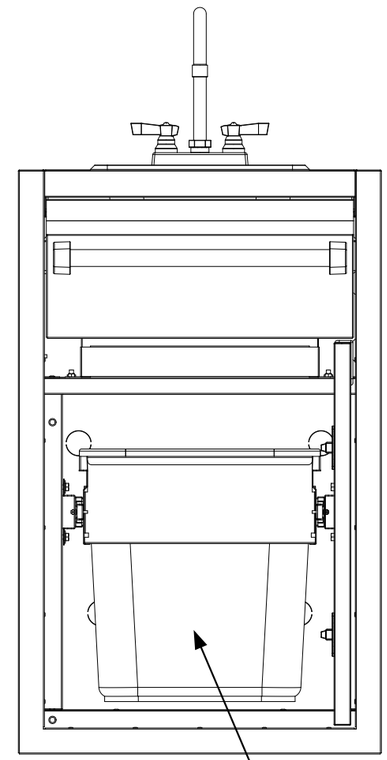

Storage area below the built-in sink shown with optional garbage drawer IBISC-SK-GH

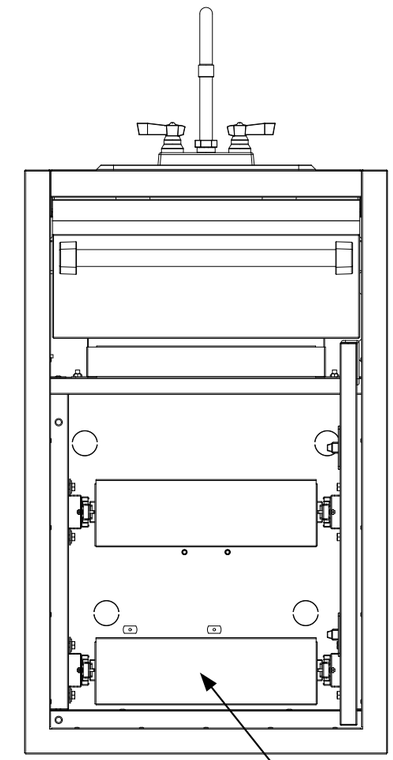

Storage area below the built-in sink shown with optional utility drawer. The cabinet can accommodate a single drawer IBISC-SK-1D or dual drawer IBISC-SK-2D as shown.

CROWN VERITY
37 Adams Blvd., Brantford, Ontario, N3S 7V8
P: (519) 751-1800 www.crownverity.com

Suggested Cut-out Dimensions	
Height	33.000
Width	19.125
Depth	24.750
Material	SS 304

Dimensions are in inches
Linear Tolerance: +/- .015
Bend Tolerance: +/- .020
Angular Tolerance: +/- 0.5
Radial Tolerance: +/-.005

DRAWN BY: Todd Stone

TITLE	Infinite Built-In Sink Cabinet		
SIZE B	Customer Crown Verity	DWG NO IBISC-SK-XX	REV -
SCALE 1:9	01/01/2020	SHEET 3 of 3	

Copyright 2020 Crown Verity Inc. All rights reserved. Unauthorized duplication is a violation of applicable laws.