BK RESOURCES

888-310-4393 | www.bk-resources.com

SOLID QUALITY. SOLID SERVICE.

SEALED WELL STEAM TABLES

INSTALLATION & OPERATING MANUAL

Model: ST-SW-X

STEAM TABLE

ELECTRIC SEALED WELL

INSTALLATION AND OPERATING MANUAL

FUNCTION & PURPOSE

- BK Resources electric steam tables can accommodate various sizes of food pans filled with pasta, meat, or side dishes in each 500W or 750w well.
- These units are designed to maintain the proper serving temperature of hot, already cooked food. They are not intended for cooking raw food or reheating prepared food. Returns will not be accepted if the units are used for these purposes.

⚠	**FOR YOUR SAFETY:** Do not store or use flammable liquids and vapors in the vicinity of this or any other appliance.	⚠
⚠	**Warning:** Improper installation, adjustment, alteration, service or maintenance can cause property damage, injury or death. Read this manual thoroughly before installing or servicing this equipment.	⚠
⚠	**Warning: Burn Hazard -** Hot water and steam in the pan can burn skin.Use protective gloves, mitts or pot holder when removing food containers or covers. Hot food can also cause burns. Handle hot food carefully.	⚠
⚠	**Warning: Fire Hazard -** Do not operate this equipment without post, shelf and legs or casters properly installed. The heating compartment must be separated from the supporting surface of the unit.	⚠

Owner info:

1. Clean equipment before use.
2. All equipment should be used by trained personnel only.
3. Keep customers from coming into contact with any surface labeled "CAUTION HOT".
4. Do not pour cold water into the dry heated units.
5. Never hold food below 150º

ASSEMBLY INSTRUCTIONS
STEAM TABLE w/ SHELF

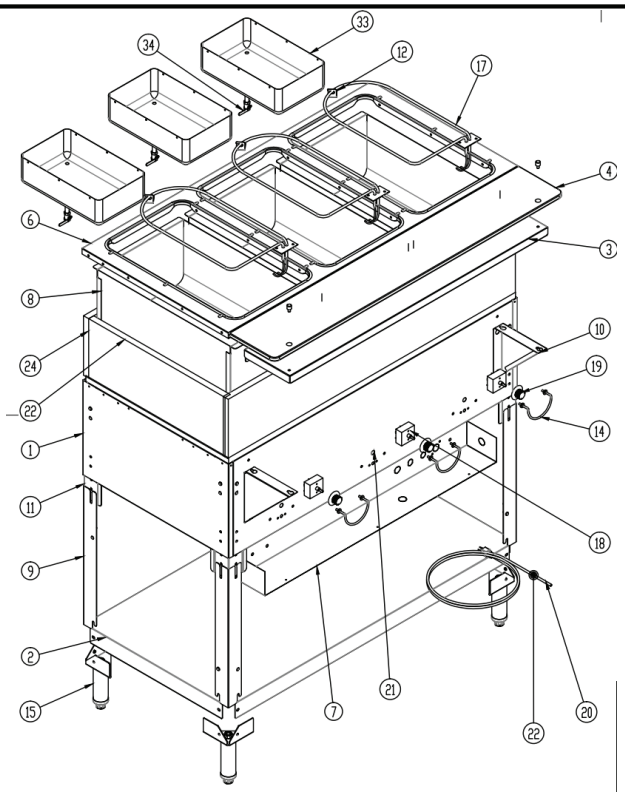

Available Models:
ST-SW-2
ST-SW-3
ST-SW-4
ST-SW-5

Open Well Steam Table Main Components Prices

PART#	Description	PART NUMBER	COMPATIBLE WITH
#20-1	Power Cable for 2-well,3-well unit,120V, SJTOW 14AWG 3PINS XH203	ST-SW-PC120V	ST-SW-2
#20-3	Power Cable for 2-Well,3-Well,4-well unit,208V ; 2-Well,3-Well,4-well,5-Well unit 240V, SJTOW 14AWG 3PINS XH229	ST-SW-PC240V	ST-SW-3, ST-SW-4, ST-SW-5
#18	Thermostat 120V,208V,240V	ST-SW- TS	ALL ST-SW
#19	Knob	ST-TK	ALL ST-SW
#17-1	Heating element, 500W 120V	ST-SW-HE500	ST-SW-2
#17-3	Heating element, 750W 240V	ST-SW- HE750	ST-SW-3, ST-SW-4, ST-SW-5
#21	Indicator light ,yellow	ST-IL	ALL ST- & ST-SW
#4	Plastic board for 2- well unit	ST-PB2	ST-2 & ST-SW-2
#4	Plastic board for 3- well unit	ST-PB3	ST-3 & ST-SW-3
#4	Plastic board for 4- well unit	ST-PB4	ST-4 & ST-SW-4
#4	Plastic board for 5- well unit	ST-PB5	ST-5 & ST-SW-5
#33	Sealed water tank	ST-SW- WT	ALL ST-SW
# 34	Water Valve	ST-SW-WV	ALL ST-SW

1. Confirm all parts/hardware are included

2. A) Place the Body upside down on a clean surface to avoid scratching. Loosen the Screws on the inside and outside of the Body. Note: Do NOT fully remove Screws from the Body. B) Insert the Legs into the slots created by the outer shell of the Body and the brackets on the inside corners of the Body. Once the Legs are in their proper locations, secure the Legs to the Body using the Screws provided. Note: A rubber mallet may be needed to get the Legs in their proper locations.

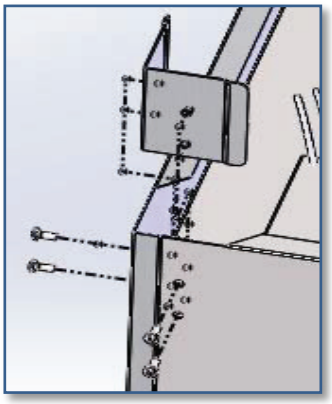

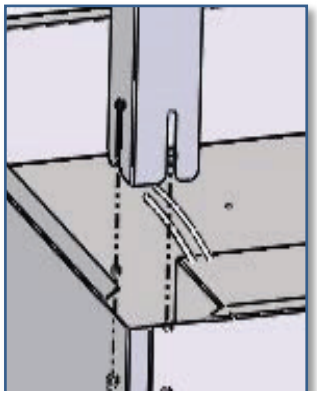

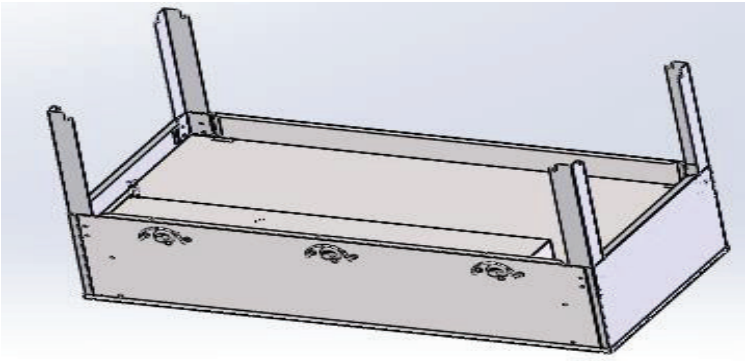

3. A) Loosen the Screws on the Lower Shelf to allow the Legs to be inserted between the outside of the Lower Shelf and the Screw head. Note: Do NOT fully remove Screws from the Lower Shelf. Once the Legs and Lower Shelf are in their proper positions, tighten together using the Screws provided. B) After securing the Lower Shelf, the Adjustable Feet may now be installed into the Lower Shelf. The table may now table be placed right side up. Once right side up, if needed, adjust feet to level.

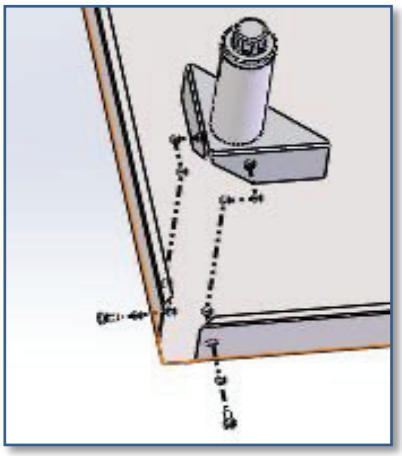

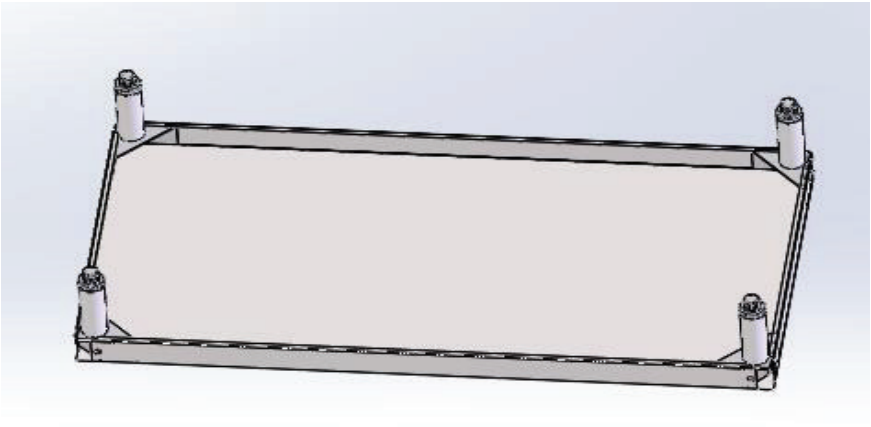

4. A) Attach the Side Shelf Brackets using the Capped Nuts provided. The Left & Right Side Shelf Brackets have threaded studs which will point to the outside of the Steam Table when installed. Note: Do not fully tighten Capped Nuts. B) Install the Side Shelf on the Side Shelf Brackets. The Side Shelf will be positioned between the Body and the Side Shelf Brackets and the slots on the Side Shelf will go over the threaded studs on the Left & Right Side Shelf Brackets. The Capped Nuts may now be fully tightened down.

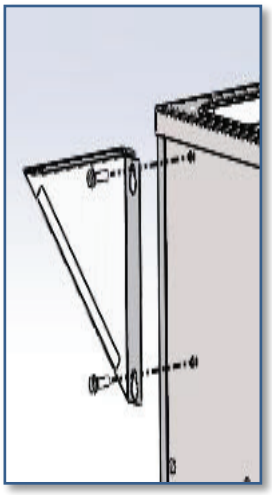

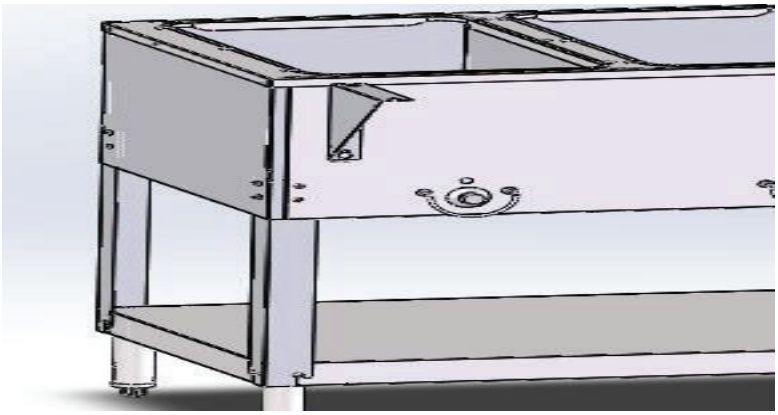

5.A) Place Cutting Board on top of the Side Shelf. B) Using the Cutting Board Brackets and Capped Nuts, secure the Cutting Board to the Side Shelf. C) After plugging into an outlet, the Steam Table is ready for use. Note: Please make sure drain valves are closed prior to use.

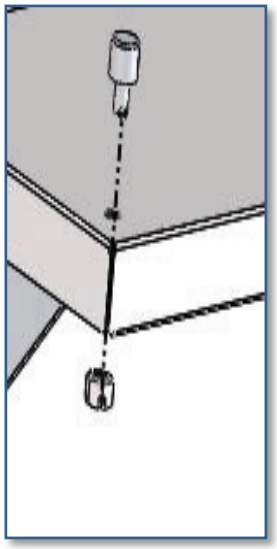

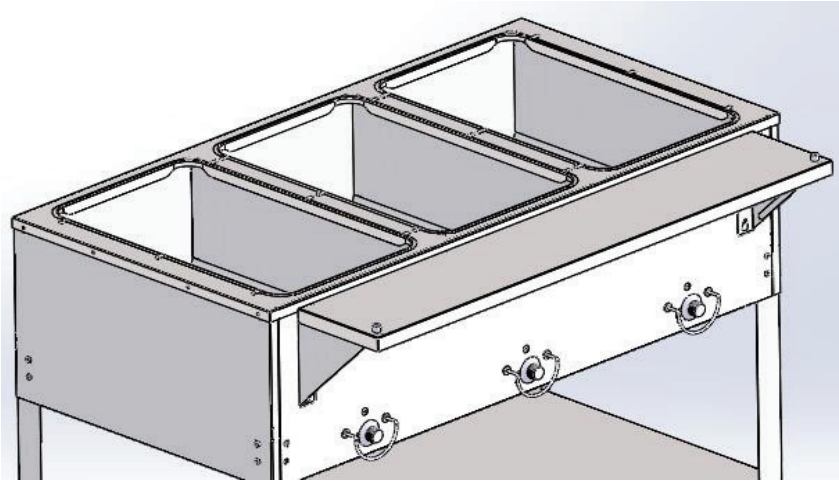

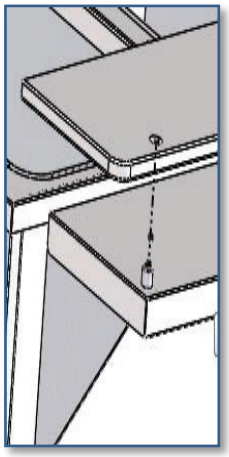

DIMENSIONS:

Open Well

Model#	Wells	W(mm)	D(mm)	H(mm)
ST-SW-2	2	30.315" (770)	29.488"(749)	33.268" (845)
ST-SW-3	3	44.315" (1125.60)	29.488"(749)	33.268" (845)
ST-SW-4	4	58.315" (1481.20)	29.488"(749)	33.268" (845)
ST-SW-5	5	72.315" (1836.80)	29.488"(749)	33.268" (845)

ST-SW-X
WIRING DIAGRAM

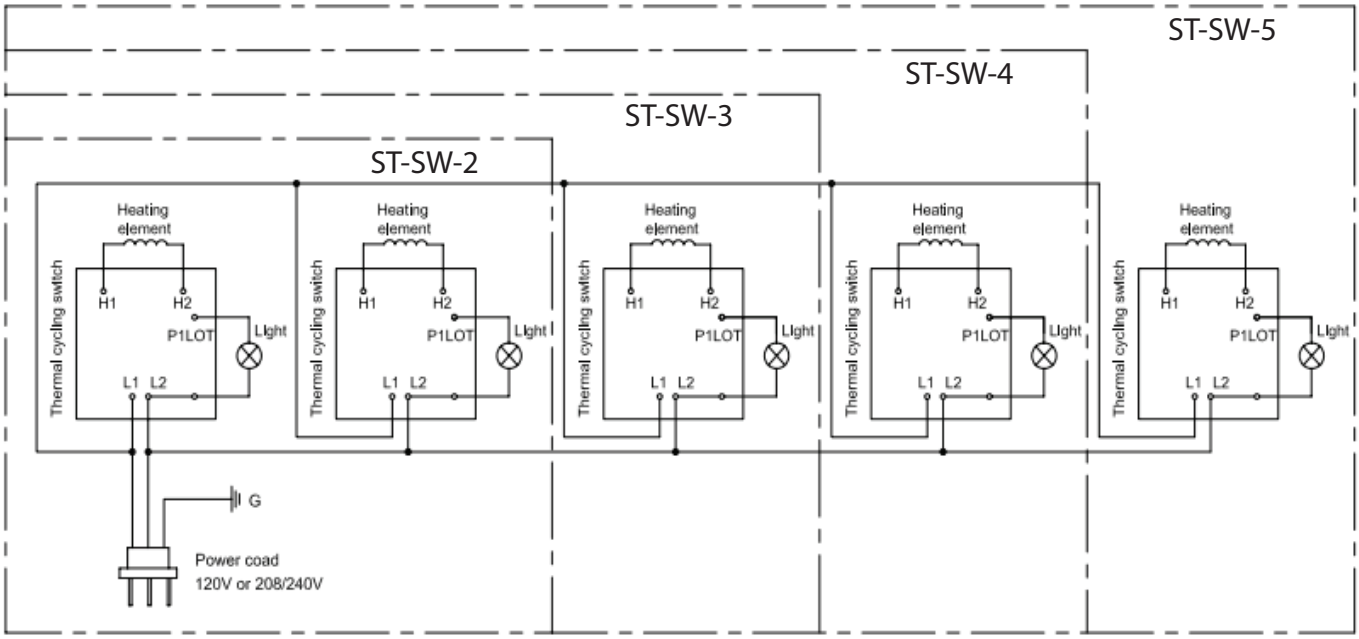

SPECIFICATIONS						
Model No.	Description	Volts	Watts Per Well	Total Watts	Amps	Plug
ST-SW-2	2-Well	120	500	1000	8.3	NEMA-5-15
ST-SW-3	3-Well	240	750	2250	9.4	NEMA 6-20
ST-SW-4	4-Well	240	750	3000	12.5	NEMA 6-20
ST-SW-5	5-Well	240	750	3750	15.6	NEMA 6-20

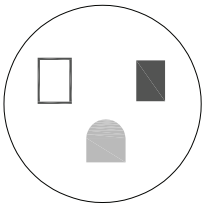

Typical Outlet NEMA 5-15

Typical Outlet **NEMA 6-20**

OPERATING INSTRUCTIONS

DRY OPERATION WITH COVER

1. Pre-Heat the well on "HIGH" for approximately 30 minutes.
2. Monitor food temperature and if it exceeds the desired sustained temperature, turn the unit down slowly in increments until the temperature you need is met and holds steady. Sanitation Standards requires food to be a minimum of 150ºF.

WET OPERATION WITH COVER

1. Fill food well with two (2) quarts of water. For quicker pre-heating, use hot water to fill the well.
2. Turn the control to "HIGH" and pre-heat the warmer for 45 minutes.
3. Monitor food temperature and if it exceeds the desired sustained temperature, turn the unit down slowly in increments until the temperature you need is met and holds steady. Sanitation Standards requires food to be a minimum of 150ºF.
4. Never pour water into a well that has been heated dry. This may cause well to crack and leak.
5. Always fill well before preheating or before water level is below 1/2"

CLEANING INSTRUCTIONS

WARNING: Insure the appliance has been turned off and has had sufficient time for all surfaces to cool down before cleaning.
NOTE: Your steam table should be cleaned daily to extend the life of the unit and keep sanitary serving condition.

1. Allow unit to completely cool before cleaning.
2. Disconnect the cord before cleaning.
3. To avoid damage, do not use abrasive cleaners or sourcing pads.
4. Avoiding using cleaners as the chemical residue could damage or corrode the surface of the unit.
5. Wipe the inside and outside surfaces of unit using a warm damp cloth and an all-purpose cleaner. Since these units can come in contact with spilled foods,a sanitizer should also be used.

   CAUTION: Do not allow water to splash or run on to the controls or wiring.
6. Always wipe the unit dry once done cleaning.

Troubleshooting

Issue	Possible Issue	Possible Solution
Elements burn out after short time.	Improper voltage.	Check the power supply and rated voltage on the serial plate to verify the equipment is connected to proper voltage.
One well does not get as hot as all the others.	Thermostats could be out of calibration	When the unit is cold, turn the thermostat from the off position slowly to full on. You should hear a "click" around the second or third position. If the click is heard much later, the thermostats are out of calibration and must be replaced. Knocking the thermostats can cause them to become uncalibrated.
Well leaks or drains leak (sealed well).	Well leak: Limescale builds up and causes pinholes. Drain leak: Obstruction of the drain valve.	Well Leak: Contact customer service. Drain leak: Check for obstructions.
Drain leaks	The plastic drain adapter is cracked where the brass reducer or valve is screwed into it.	The drain parts should be hand-tightened only. Teflon tape should not be used when installing drain valves. Over-tightening the drain parts can crack the plastic. Or Check for obstructions
Wells do not get hot enough.	Too much water in the well.	See operation section for recommended water level.
	Water was not properly preheated.	See operation section.
	Power supply might be inadequate.	Check the power supply and rated voltage on the serial plate to verify the equipment is connected to proper voltage. While it is possible to run 240V equipment on a 208V connection, doing so will reduce wattage output by up to 25% and could potentially impact performance.

WARRANTY

BK Resources warrants to the original owner that goods supplied hereunder manufactured by BK Resources will be free from defects in materials and workmanship for a period of one year from date of original installation, not to exceed 18 months from date of shipment from the factory. BK Resources will replace, without charge, any defective parts or component material, upon demonstration to its satisfaction that a breach of warranty did not exist.

This warranty does not cover any cost associated with maintenance, misuse, abuse, improper installation, improper ventilation, adjustments, alteration, calibration, wrong voltage, resetting of circuit breakers or safety controls, overtime charges, mileage in excess of 100 miles, operation contrary to the installation and operating instructions, damage caused by flood, fire, or acts of God. This warranty shall not apply if the nameplate has been removed or altered.

There are no warranties, which extend beyond these warranties. All other expressed or implied warranties, including those of merchantability or fitness for a particular purpose, which exceed the warranties stated above, are disclaimed by BK Resources and excluded from this agreement. No employee or agent of ours has any authority to make any representation or warranty, which exceeds the warranties stated above.

BK RESOURCES

888-310-4393 | www.bk-resources.com

SOLID QUALITY. SOLID SERVICE.

SEALED WELL STEAM TABLES

PLUMBING

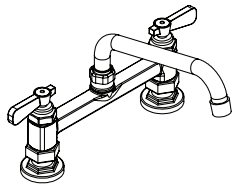

DISH TABLES

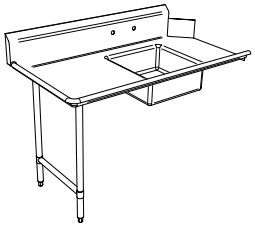

HAND SINKS

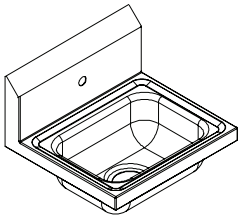

COMPARTMENT SINKS

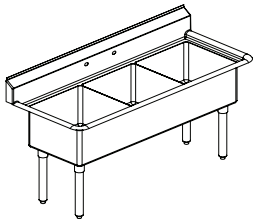

GREASE TRAPS

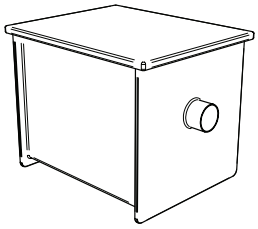

DROP IN SINKS

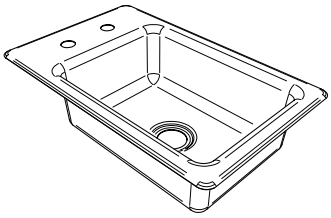

UNDERBAR EQUIPMENT

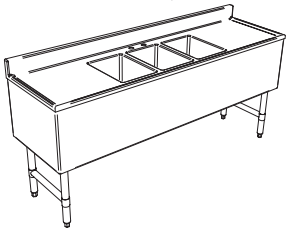

SHELVING

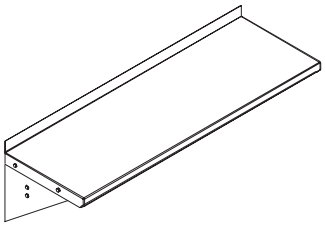

STAINLESS STEEL TABLES