STOELTING
A VOLLRATH® BRAND

Project:

Item Number:

Quantity:

CF101X SINGLE BARREL CONTINUOUS FLOW COUNTERTOP CUSTARD FREEZER MACHINE

ITEMS

- ☐ **CF101X-302B** Air-cooled, single-phase

ACCESSORIES & OPTIONS

- ☐ **4177350** FS2 Floor Stand 22” x 24” x 31”
- ☐ **4183513** FSS2 Floor Stand 22 x 24” x 26”
- ☐ **2202408** FS4 Floor Stand 24-1/4” x 22-1/4” x 18-3/4”

FEATURES

- Quick-Freeze Technology™ minimizes size of ice crystals to ensure smoother, creamier product.
- Hold cycle keeps barrels at a safe temperature during off-cycle.
- Compact, counter-top model saves space.
- Easy to clean design ensures sanitary operation and ensures product is always fresh.
- Refrigerated hopper with independent temperature control maintains safe storage temperatures in any environment.
- IntelliTec™ control with lighted display provides simple two-button operation.
- Super-sized condensing system provides high output even in high temperature conditions.
- Optional floor stand to create a “floor model” package, freeing up counter space and providing additional storage.
- NSF approved food-grade plastic blades provide quiet operation and superior durability.

DESCRIPTION

Countertop continuous flow freezer produces gourmet old-fashioned frozen custard, sorbet, Italian ices and other frozen desserts. The patented freezing chamber minimizes the size of ice crystals for a smoother, creamier product. Match production to demand with the “hold product” mode refrigeration setting.

STOELTING WHITE GLOVE SERVICE NETWORK

Every machine includes Stoelting’s White Glove Service. One call does it all – customer service, technical service, parts or warranty information, installation, startup, sales, on-site service dispatch and much more. Available 24 hours a day, seven days a week year-round.

Continuous research leads to ongoing product improvements; therefore, these specifications are subject to change without notice and should not be used as installation specifications.

Approvals	Date

CF101X SINGLE BARREL CONTINUOUS FLOW COUNTERTOP CUSTARD FREEZER MACHINE

DIMENSIONS

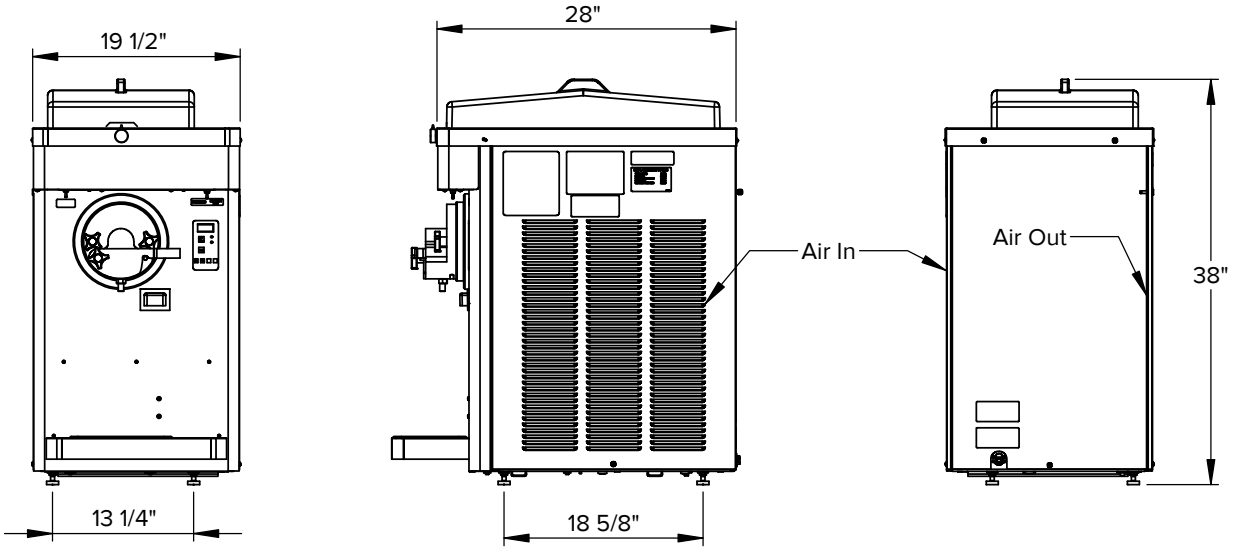

Height dimensions may vary ±1/2” due to adjustable legs

GENERAL SPECIFICATIONS

Freezing Cylinder				Hopper Capacity gallon (L)	Drive Motor (hp)	Weight lb (kg)	Crated Weight lb (kg)
Capacity gallon (L)	Compressor						
	Btu/hr	Refrigerant	Charge (oz)				
0.8 (3.03)	6,000	R-448A	72	5.4 (20.4)	1 1/2	310 (140.6)	410 (186.0)

- Indoor use only.
- Maximum ambient temperature: 100°F (37.8°C).
- Requires a dedicated electrical circuit.
- Power cord provided (no plug).
- Air cooled units require: 6” (15.2 cm) air space on both sides and 10” (25.4) air space above the machine.
- Details on CAD Revit Symbols Libraries are available on www.stoelting.kclcad.com website.

ITEM NUMBER SPECIFICATIONS

Model Number	Cooling	Phase	Volts	Hz	Running Amps	Cord with Plug (Included)
CF101X-302B	Air	1	220-240	50	15	NA

STOELTING
A VOLLRATH BRAND

Service Information
800-319-9549 (U.S. Toll Free)
920-894-2293 (Outside the U.S.)
stoeltingfoodservice.com
vollrathfoodservice.com

©2023 Stoelting, a Vollrath Brand
ISO 9001:2015 Registered