Science.
Applied to Life.™

April 2019

3M™ Water Filtration Products I Foodservice Systems

SGLP100-CL & SGLP200-CL Series Reverse Osmosis Systems

for use in combi-oven and steamer applications.

Technical Data Sheet

SGLP200-CL System

Introduction

The 3M reverse osmosis water filtration systems featured here are designed to produce consistent Recipe Quality Water™ and help reduce scale and corrosion in combi-ovens and steamers. Their reverse osmosis (RO) membrane is designed to reduce hardness minerals and total dissolved solids (TDS) that may cause maintenance costs or shortened equipment life.

Product Benefits

- Prefilter reduces particulates, chloramines, chlorine taste and odor from the incoming water to help protect equipment.
- Quick and easy cartridge change-outs—no spills, no mess.
- No electricity needed—integrated pump operates on incoming water pressure.[1]
- Sanitary Quick Change (SQC) encapsulated cartridges reduce media contamination during change-outs.
- Wall-mounted steel bracket is rust and corrosion resistant.
- Compact for installation in tight spaces.

Product Specifications

Model Number	Part Number	Description	Capacity[2]	Application
SGLP100-CL	5636201	Reverse Osmosis System	100 gpd (379 lpd)	Combi-ovens, Steamers
SGLP100-CL-BP	5636204	Reverse Osmosis System w/bypass	100 gpd (379 lpd)	Combi-ovens, Steamers
SGLP200-CL	5636202	Reverse Osmosis System	200 gpd (757 lpd)	Combi-ovens, Steamers
SGLP200-CL-BP	5636203	Reverse Osmosis System w/bypass	200 gpd (757 lpd)	Combi-ovens, Steamers
SGLP Bypass (Accessory included with SGLP100-CL-BP and SGLP200-CL-BP systems. Not intended for use on SGLP100-CL and SGLP200-CL systems.)	50-94601	SGLP Bypass Kit	N/A	Combi-ovens, Steamers

[1] Minimum 60 psi (413.6 kPa) feedwater pressure required.

[2] RO production rates listed are at a water pressure and temperature of 60 psi and 77° F producing water at atmosphere.

SGLP100-CL and SGLP200-CL are intended in applications where the RO product water is used only for cooking (i.e. ovens with a separate water inlet for cleaning). The water used for cleaning the oven may be unfiltered water or filtered only through the HF65-CL pre-filter.

SGLP100-CL-BP and SGLP200-CL-BP include autobypass kit (i.e. Ovens with a single water inlet connection), which allows those systems to be used in applications where product-water outlet is used for both steaming and cleaning the oven.

SGLP100-CL & SGLP200-CL Series Reverse Osmosis Systems

Specifications

- System incorporates reverse osmosis technology.
- System incorporates a non-electric pump.
- System contains integrated pre-filtration for the reduction of particulate, chloramines and chlorine taste and odor.
- RO membrane is a thin film composite (TFC) type.
- System is wall mountable with a steel bracket design.
- System inlet plumbing connections are 3/8" quick disconnect type.
- System drain plumbing connections are 3/8" quick disconnect type.
- System outlet plumbing connections are 1/2" quick disconnect type.
- System includes an integrated water storage tank.
- System minimum incoming water pressure of 60 psi (414 kPa) and maximum of 125 psi (689 kPa). External booster pump is required for incoming pressure less than 60 psi (414 kPa).
- System minimum incoming water temperature of 40° F (4.4° C) and a maximum of 100° F (37.8° C).
- System includes plumbing connection for optional 1/2" port for providing pre-filtered water for cleaning cycle.

⚠ WARNING

Read entire manual. Failure to follow all guides and rules could cause personal injury or property damage.

- Check with your local public works department for plumbing codes. You must follow their guidelines as you install the water filtration cartridge.
- Your water filtration cartridge will withstand up to 125 pounds per square inch (psi) water pressure. If your water supply pressure is higher than 80 psi, install a pressure reducing valve before installing the water filtration cartridge.

To reduce the risk associated with the ingestion of contaminants:

- DO NOT use with water that is microbiologically unsafe or of unknown quality without adequate disinfection before or after the system.
- DO NOT use with water that is unsafe or unknown quality with respect to any contaminants.
- DO NOT use on a water source that does not meet the water quality and safety standard criteria set forth by your local regulatory body. ONLY install on a portable cold-water supply (your water must be safe for consumption prior to installing and using this water filter).

NOTICE

To reduce the risk associated with water leakage or flooding:

- Read and follow Use Instructions before installation and use of this system.
- Change the disposable filter cartridge at the recommended interval; the disposable HF65-CL model 5628902 pre-filter cartridge MUST be replaced every 12 months or sooner.
- Change the disposable membrane filter and membrane cartridges at the recommended interval; the disposable CFS M model 5625004 RO membrane cartridge MUST be replaced every 24 months or sooner.
- Failure to replace the disposable filter cartridge at recommended intervals may lead to reduced filter performance and failure of the filter, causing property damage from water leakage or flooding.

SGLP100-CL

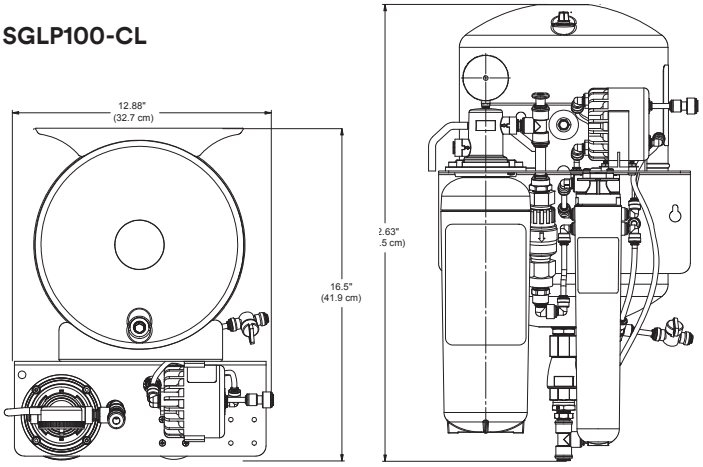

Replacement Cartridges

Model Number	Part Number	Type	Qty. Required
HF65-CL	5628902	5 micron, particulate, chloramines, chlorine taste and odor pre-filter cartridge	1
CFS M	5625004	Reverse Osmosis Membrane cartridge	1 (SGLP100-CL), 2 (SGLP200-CL), 1 (SGLP100-CL-BP), 2 (SGLP200-CL-BP)

Product Selection and Use:
Many factors beyond 3M's control and uniquely within user's knowledge and control can affect the use and performance of a 3M product in a particular application. As a result, end-user is solely responsible for evaluating the product and determining whether it is appropriate and suitable for end-user's application, including completing a risk assessment that considers the product leachable characteristics and its impact on drug safety conducting a workplace hazard assessment and reviewing all applicable regulations and standards (e.g., OSHA, ANSI, etc.). Failure to properly evaluate, select, and use a 3M product and appropriate safety products, or to meet all applicable safety regulations, may result in injury, sickness, death, and/or harm to property.

Warranty, Limited Remedy, and Disclaimer: 3M warrants this Product to be free from defects in material and workmanship for one (1) year from the date of manufacture. This warranty does not cover failures resulting from abuse, misuse, alteration or damage not caused by 3M or failure to follow installation and use instructions. No warranty is given as to the service life of any filter cartridge or membrane as it will vary with local water conditions and water consumption. 3M MAKES NO OTHER WARRANTIES OR CONDITIONS, EXPRESS OR IMPLIED, INCLUDING, BUT NOT LIMITED TO, ANY IMPLIED WARRANTY OR CONDITION OF MERCHANTABILITY, FITNESS FOR A PARTICULAR PURPOSE, OR ARISING OUT OF A COURSE OF DEALING, CUSTOM, OR USAGE OF TRADE. If a 3M product does not conform to this warranty, then the sole and exclusive remedy is, at 3M's option, replacement of the 3M product or refund of the purchase price.

Limitation of Liability:
Except for the limited remedy above, and except to the extent prohibited by law, 3M will not be liable for any loss or damage arising from or related to the 3M product, whether direct, indirect, special, incidental, or consequential, (including, but not limited to, lost profits or business opportunity), regardless of the legal or equitable theory asserted, including, but not limited to, warranty, contract, negligence, or strict liability.

3M Purification Inc.
3M Separation and Purification Sciences Division
400 Research Parkway
Meriden, CT 06450 U.S.A.
1-800-222-7880 3Mfoodservice.com

3M and Recipe Quality Water are trademarks of 3M Company.
Please recycle. Printed in USA.
© 3M 2019. All rights reserved. 70-2016-0031-2