Undercounter Refrigerator HKN-UC48R2C

HURAKAN

Item #: HKN-UC48R2C/US Project: _____

Qty: _____ Date: _____ Approval: _____



Features

- These units offer ample space for organized storage solutions.
- Energy-efficient refrigeration systems ensure optimal performance and reduced costs.
- Built with durable materials, these appliances are designed for longevity.
- Easy-to-use controls and interfaces make operation seamless and convenient.

Technical Data

Width	48 3/8 Inches
Depth	30 1/8 Inches
Height	35 6/8 Inches
Power Cord Length	78.7 Inches
Interior Width	44 2/8 Inches
Right Door Opening Width	23 5/8 Inches
Interior Depth	25 4/8 Inches
Interior Height	15 1/8 Inches
Work Surface Height	35 Inches
Amps	3.1 Amps

ETL, US 5-15P ETL Sanitation

Instructions and images in this manual are only for reference and may differ from the actual product. Launch the E-Manual.

www.equip.me

2024 Hurakan

Technical Data

Hertz	60 Hertz
Phase	1 Phase
Voltage	115 Volts
Access Type	Doors
BTU (LBP)	1600 BTU
Capacity	12.96 cu.ft.
Compressor Location	Rear Mounted
Compressor Style	Side / Rear Breathing
Door Style	Swing
Door Type	Solid / Left & Right
Features	Removable Magnetic Door Gaskets
	Self-Closing Doors
Horsepower	2/5 HP
Individual Shelf Capacity	132 lb.
Number of Doors	2 Door
Number of Shelves	2 Shelf
Plug Type	NEMA 5-15P
Refrigerant Capacity	2.82oz.
Refrigerant Type	R-290
Style	Counter Height
Temperature Range	33 - 40 Degrees F
Top Capacity	809 lb.
Type	Refrigerators
	Undercounter Refrigerators

2024 Hurakan

Plan View

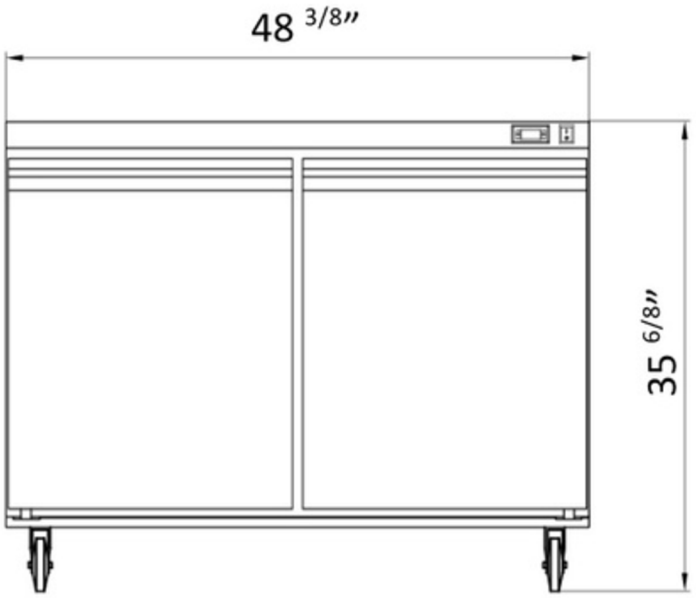

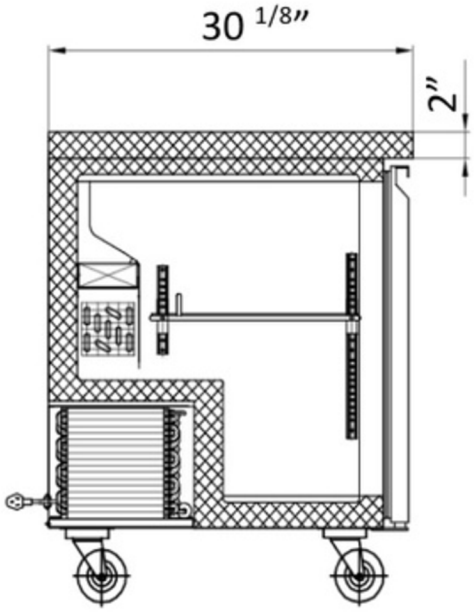

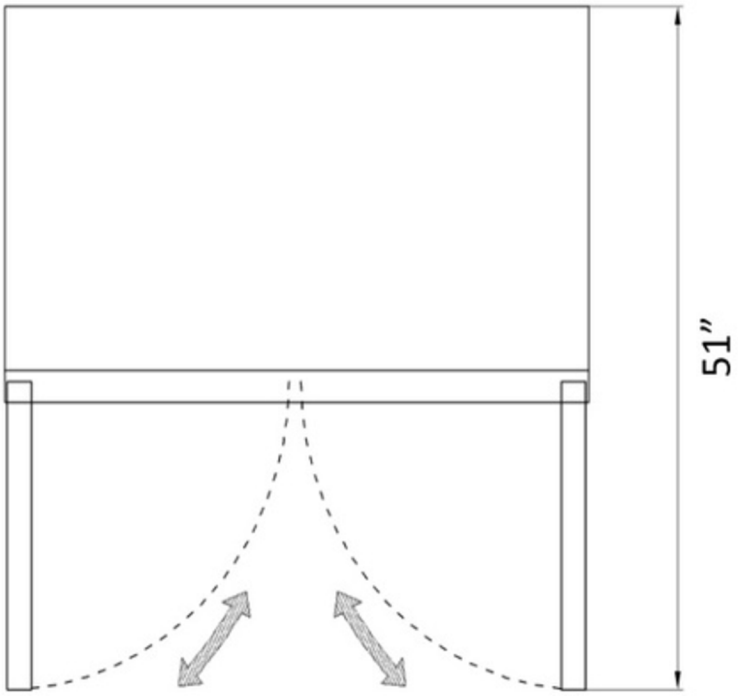

2024 Hurakan

Notes & Details

The under-counter unit stands out as a space-saving marvel, seamlessly integrating into existing kitchen setups with its compact design. Its undercounter placement eliminates the need for extra floor space, making it a perfect choice for kitchens where every square inch counts. This strategic positioning not only enhances the aesthetics of the kitchen but also optimizes workflow by providing convenient access to chilled items right where they're needed, streamlining food preparation and service processes.

Moreover, the under-counter design showcases thoughtful engineering, ensuring that cold storage space is maximized without sacrificing functionality. Its efficient use of space makes it an indispensable asset for busy commercial kitchens, allowing chefs and staff to work efficiently without compromising on food storage needs. The adjustable shelves within the unit provide flexibility for organizing items of various sizes, further enhancing its usability.

Furthermore, the under-counter unit's stainless steel construction and reliance on R290 refrigerant demonstrate a commitment to durability and sustainability. Stainless steel is known for its strength and corrosion resistance, making it an ideal material for commercial kitchen equipment that requires frequent use and cleaning. Additionally, R290 refrigerant has a low environmental impact, contributing to eco-conscious operation and reducing the unit's carbon footprint.

In essence, the under-counter unit earns praise for its innovative design, space-saving features, durability, and eco-conscious operation. Its seamless integration into kitchen layouts, efficient use of space, and reliable performance make it an invaluable addition to any professional kitchen setting, enhancing productivity and sustainability.

ETL Sanitation

Intertek

This product has been certified by ETL, a division of the Intertek Group, to meet applicable sanitation standards required for use in the United States and Canada.

5-15P



This unit comes with a NEMA 5-15P plug

ETL, US

Intertek

This product has been certified by ETL, a division of the Intertek Group, to meet applicable electrical product safety standards required for use in the United States.

2024 Hurakan