TECHNICAL DATA SHEET
VACUUM PACKAGING MACHINES

EVOX30 12MC/H

DESCRIPTION

The iconic Evox line represent the synthesis between innovative and ergonomic design, advanced materials and ease of use.
The vacuum chamber is made of structural technopolymer, incorporating the sealing device and the control panel. It is combined with a curved and tempered glass cover with extreme high mechanical resistance.
The absolute vacuum sensor, the large vacuum chamber, the ease of maintenance make it a precise, fast, versatile and reliable vacuum packing machine.

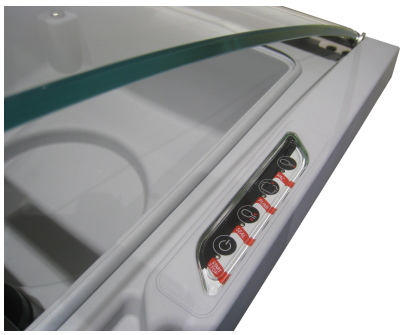

SEALING BAR 12.2 inch
VACUUM PUMP 423 cf/h
ABSOLUTE SENSOR CONTROL

Intertek Intertek
According to:
UL197 / NSF Hygienic standards

FEATURES

- Oil lubricated rotary vane vacuum pump, nominal speed 7,05 cfm (12 m³/h); fast vacuum cycle (35"-60");
- Vacuum level control through high precision absolute sensor;
- Maximum vacuum 99.8% (2 millibars);
- 12,2" sealing bar in fireproof technopolymer, easily removable for cleaning;
- Waterproof digital control panel with four capacitive keys;
- Preset program for vacuum packaging in bags of products intended for storage;
- Preset program for vacuum packaging in bags of products intended for sous vide cooking;
- Program for vacuum packing in containers;
- Four adjustable sealing intensity levels;
- Pump oil dehumidification program;
- Resettable oil change alarm;
- Structural technopolymer vacuum chamber, FDA certified for food contact suitability. Incorporates the sealing device and the control panel, easy to clean shape;
- 8mm thick curved and tempered glass cover, coated with 100 micron safety film, high mechanical strength (36 times more resistant than an equivalent PMMA / Plexiglas lid);
- Machine body in AISI304 stainless steel; pump oil drain of the machine body with cover, which prevents the penetration of impurities or insects inside;
- Front opening of the machine body to facilitate access to maintenance;
- Technopolymer protective covers of electronic boards;
- Thermal welding protection system;
- Suction device for external containers;
- Accessory "Easy" for external vacuum in embossed bags;
- 4 PE filling plates for product adjustment and cycle speed up.

ACCESSORIES (NOT INCLUDED)

- Smooth vacuum bags for storage, cooking and "cook & chill";
- Embossed vacuum bags for external vacuum;
- Stainless steel cart with castors and shelf;
- Inclined stainless steel plate for liquid packing.

PROJECT	DATE	APPROVED
ITEM	QTY	

VACUUM PACKAGING MACHINES EVOX30 12MC/H

UPDATED: 28/07/2021

ORVED S.P.A.
Via dell' Artigianato, 30
30024 Musile di Piave (VE) - ITALY - www.orved.it
Service: assistenza@orved.it
Sales support: orved@orved.it

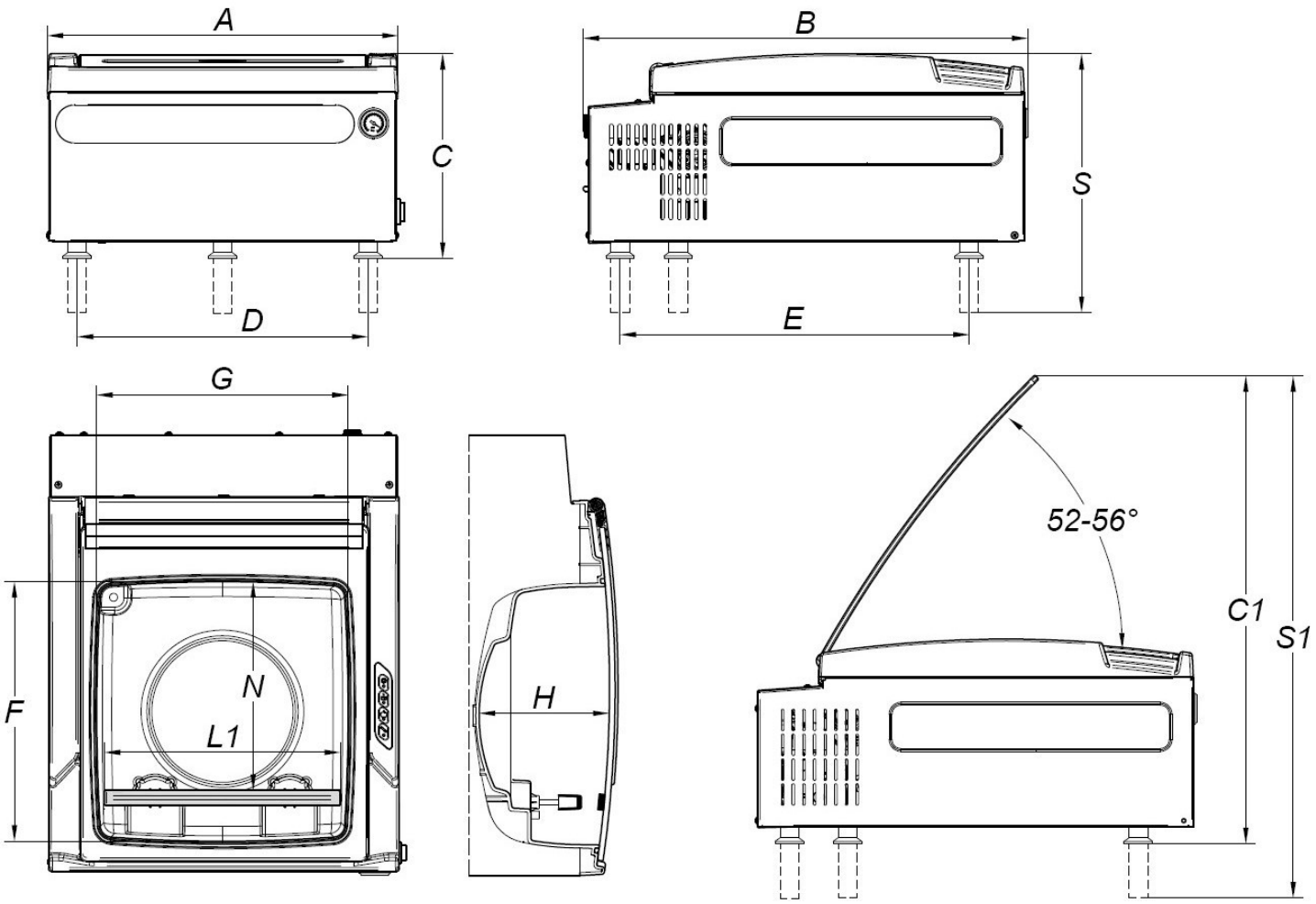

SPECIFICATIONS

Length of seal L1	**inch**	12,2
Nominal pump speed	**cfm**	7,05
Final pressure	**mbar**	2
Chamber size (FxGxH)	**inch**	14,4x14,0x7,2
Useful chamber space (N)	**inch**	11,6
Chamber depth (H)	**inch**	7,2
Chamber volume	**Usgal**	4,512
Power	**W**	900
Electrical voltage/Frequency/Phases	**V/Hz**	110V / 60Hz / 1Ph+N+PE
Power cord and plug		82.6 inch+IEC / Nema 5
Current	**A**	8,1
Housing materials		Stainless steel (AISI304)
Vacuum chamber material		Technopolymer (Suitable for food contact)
Lid material		Tempered glass covered with safety film
Overall dimensions (AxBxC)	**inch**	19,5X24,7X11,3
Overall dimensions (AxBxS)	**inch**	19,5X24,7X14,4
Maximum height with open lid (C1)	**inch**	25,9
Maximum height with open lid (S1)	**inch**	28,9
Distance between supports (DxE)	**inch**	16,1X19,4
Weight (with filling plates)	**lbs**	90,4
Noise level	**dB(A)**	62
Environmental operating temperature (min-max)	**°F**	53,6-104