X RANGE

Grease Guardian®

Sustainable Grease Management

GGX15

GREASE GUARDIAN GGX15 AUTOMATIC GREASE REMOVAL UNIT

PRO

PRO Series Units available with a additional features and alarms

15 GPM / 30+ Pounds Grease Capacity

STAINLESS STEEL

Grease Guardian Unique Undersink Design with Horizontal Sliding Dry Solids Strainer

STAINLESS STEEL CONSTRUCTION

DURABLE - RELIABLE - BUILT TO LAST

FULLY APPROVED

Grease Management Solutions For Your Kitchen

Pot Sinks, Pre-Rinse and Multi Compartment Sinks

PDI G101

ASME
A112.14.3
B481.1

UL 499
CSA C22.2 No88
E113375

IAPMO

GGX15
15 GPM - 30 pound

Point Source Units

GREASE GUARDIAN standard features

- ☐ 3 Year Warranty
- ☐ 16 Gauge stainless steel welded tank
- ☐ Fully sealed air tight system
- ☐ Universal flow direction
- ☐ PLC/HMI automatic controller
- ☐ Long life skimming blade
- ☐ Dry solids strainer
- ☐ Grease collection container (2 gallon)
- ☐ Concealed electrics and plumbing
- ☐ Integral flow control
- ☐ Integral gas trap

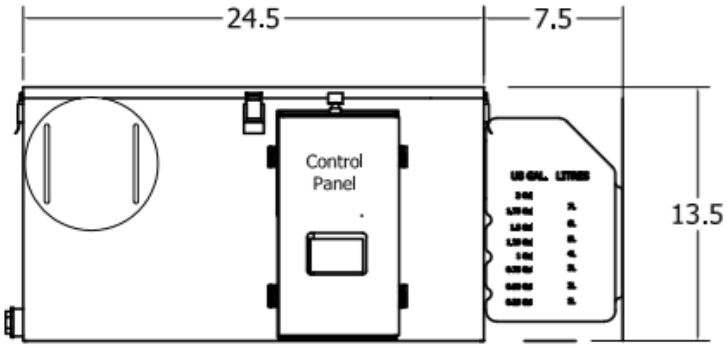

FRONT ELEVATION

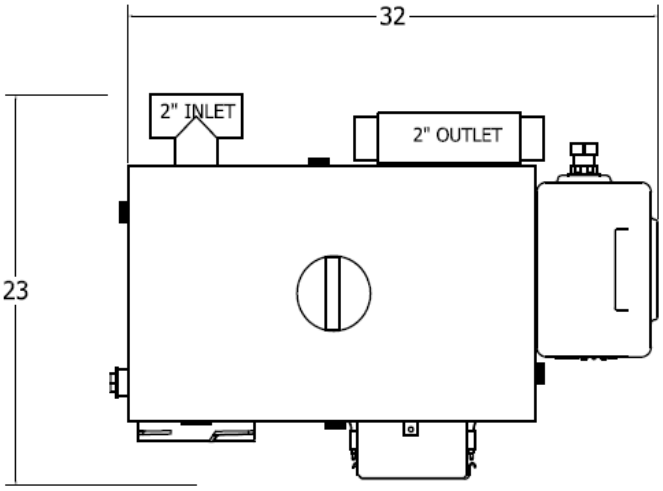

PLAN

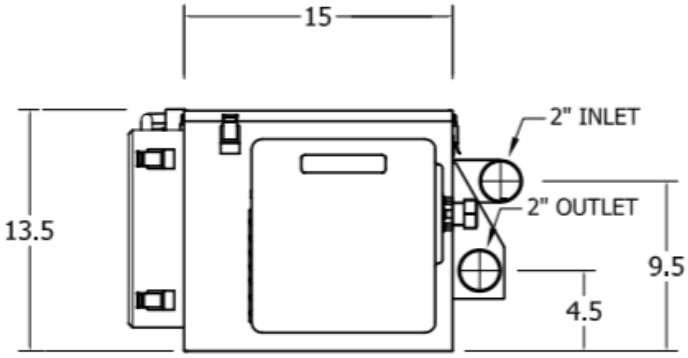

END ELEVATION

GREASE GUARDIAN GGX15

TECHNICAL DATA	
WEIGHT	88 pounds
MATERIAL	Stainless steel
INTERIOR	Stainless steel
FLOWRATE	15 gallons per minute
GREASE RETENTION	30+ pounds
SOLIDS STRAINER CAPACITY	6.6 pounds
SKIMMING RATE / LOW	11 pounds per cycle
SKIMMING RATE / HIGH	22 pounds per cycle
AVAILABLE CYCLES	4 per day
MAXIMUM SKIMMING	88 pounds per day
PROGRAM CONTROL	PLC/HMI
ELECTRICAL	110 vac 630 WATTS 5.73A

Copyright Jan 2023 FM Environmental Ltd. All Rights Reserved. Specification subject to change without notice.

GGX15
15 GPM - 30 pound

Point Source Units

KEY INSTALLATION NOTES

- Allow for the minimum clearances shown
- Allow 34” x 25” for tank and container base
- Allow adequate space for grease container
- Inlet port is uni-directional (single)
- Outlet port is uni-directional (single)
- Keep outlet piping at 1/8” per foot or greater
- Use rubber pipe connections provided
- Only switch on after filling with water
- Refer to full manual for full instructions

PRE-START UP CHECKS

- Ensure unit is positioned on a level surface and is plumbed securely
- Ensure electrical outlet is fitted with dedicated ground fault circuit breaker
- Ensure unit is filled with water to the correct level
- Ensure strainer basket is fully closed
- Set PLC date and time as detailed in the manual
- Ensure the grease container is empty and secured in place

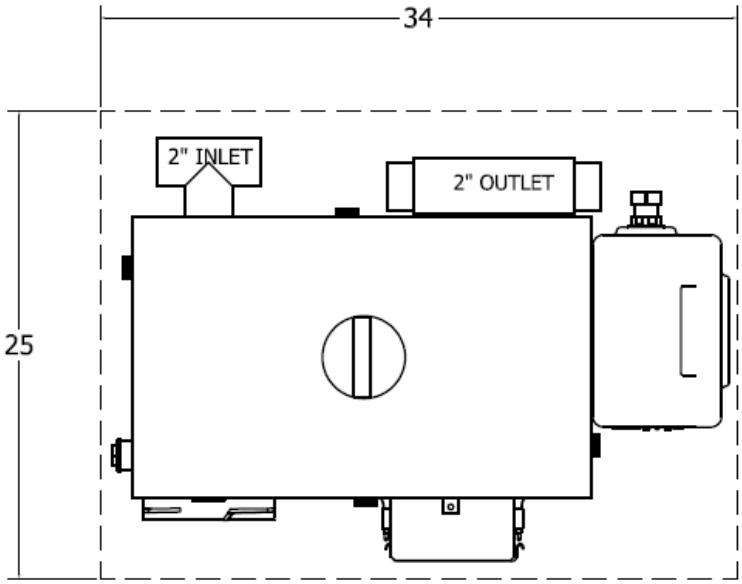

FLOOR SPACE REQUIREMENTS

Specification

☐ Grease Guardian GGX15 Part # GGX15

Grease Guardian Model GGX15, self-cleaning automatic grease removal unit. 16 gauge fully welded 304 stainless steel tank stainless steel internal baffle plate, fully sealed air tight stainless steel lid and robust stainless steel clamps, above water heavy duty stainless steel dry solids strainer basket, uni-directional inlet and outlet flow connections, with easy fit pipe couplings, concealed plumbing and electrical connections, 15 gallon per minute flowrate, 30+ pounds grease retention capacity, grease collection container and skimming rate of 11/22 pounds per low/high cycle. The GGX15 is supplied with a stainless steel rotating skimming drum, integral gas trap, integral flow control, totally enclosed geared drive unit, 600 watt immersion heater with self-regulating safety control, programmable controller and interface with energy saving mode. The GGX15 is suitable for floor or shelf mounting arrangements. The GGX15 is electrically tested and approved with MET Laboratories to UL499 and CSA C22-2 88-1952 standards. 3 year warranty is standard.

☐ Optional - Hot Water Flush Valve Part # AVA1/2-110v

Automatic hot water flush valve, 1/2” diameter, connected to rear of Grease Guardian. The hot water flush valve is connected to an internal spray bar, controlled by the Grease Guardian PLC, and opens for 5 seconds per minute while the machine is in skim mode. The hot water spray improves the movement of grease while simultaneously cleaning the internal tank walls and skimming drum.

☐ Optional - Stainless Steel Stand Part # GGX15STAND

Stainless Steel Stand for GGX15. The stand elevates the machine off the kitchen floor by 4”

www.greaseguardianusa.com

Copyright Jan 2023 FM Environmental Ltd. All Rights Reserved. Specification subject to change without notice.

X RANGE

GREASE GUARDIAN GGX15

Grease Guardian GGX15
Automatic Grease Recovery Unit
15 GPM
30+ Pounds Grease Retention

Grease Guardian GGX15

Stage 1 - Solids Separation

Wastewater from the kitchen is directed through the inlet of the GGX15. A removable inlet solids strainer collects any solid debris.

Stage 2—Grease and Oil Separation

Grease in the wastewater floats to the surface and is trapped leaving the clear water to exit the tank.

Stage 3 - Self Cleaning Grease Removal

The PLC controlled immersion heater is activated to liquefy the grease, which is then removed by the skimming drum into the external grease collector.

Fully Approved System

Grease Guardian Automatic Grease Recovery Units are the most efficient and reliable on the market.

The Grease Guardian GGX15, point source grease recovery unit intercepts wastewater from the kitchen, separates solids and grease, then automatically removes the settled grease into the external grease collector up to 4 times per day.

All Grease Guardians are built from high quality stainless steel tanks, reliable and efficient mechanical skimming devices and programmable PLC interfaces.

The Grease Guardian GGX15 machines carry an unrivaled 5 year warranty on all mechanical and electrical equipment and a 10 year warranty on the tank.

Grease Guardian®

800-677-7861

des@greaseguardian.com
www.greaseguardianusa.com

Copyright Jan 2023 FM Environmental Ltd. All Rights Reserved. Specification subject to change without notice.

Grease Guardian®
Sustainable Grease Management

Introducing PRO

Introducing the Grease Guardian Pro Version.

Our latest innovation simplifies maintenance and enhances the efficiency of the Grease Guardian, making it an indispensable solution for commercial kitchens everywhere.

PRO Features:

AUDIO ALARM

- Audio alarm to signal end of cycle.
- Monthly maintenance reminder.
- Daily maintenance reminder.

EXTENDED CLEANING CYCLE

- Extended cleaning cycle with monthly reminders.
- Extended heating and skimming cycle.
- Prompts cleaning tablet use.
- Encourages better upkeep of unit.

AUTO WASH

- Breaks up surface scum.
- Water level replenishment.
- Automatic jets spray basket area and main tank for an internal clean.

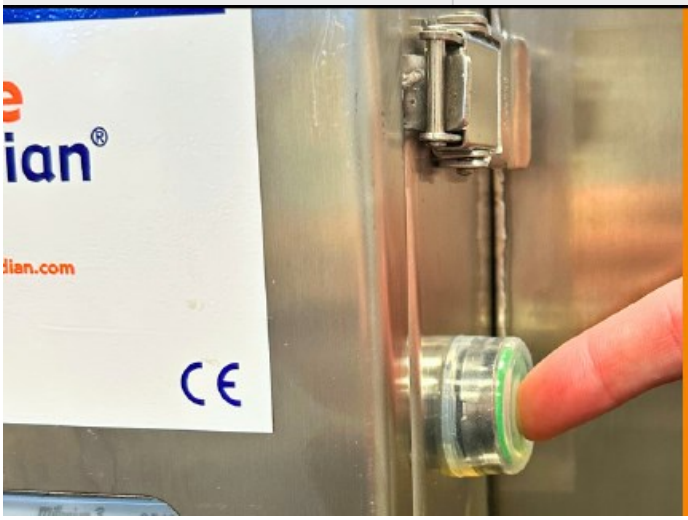

ACTION BUTTON

- Acknowledges daily maintenance.
- Runs the monthly maintenance programme.
- Starts a force skim programme.

Additional Features

PRO

DX3 Programme

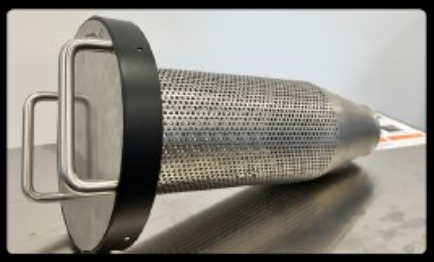

Single Structure Basket

Magnetic Installation Beneath Control Panel Cover

Improved Ventilation

Improved Access to Outlet Baffle

Grease Guardian®

800-677-7861

des@greaseguardian.com
www.greaseguardianusa.com