America's Oldest Stove Company
(Est.1838)

JOB _____ ITEM # _____

RAISED GRIDDLE RANGES

Model F330-12B
(shown w/ optional casters)

Model F330-24B
(shown w/ optional casters)

Model 2F330-1.5RB-30B
(shown w/ optional casters)

Standard Features, Benefits & Options

CONSTRUCTION: Easy cleaning, stainless steel finish, sturdily welded with angle iron and corrosion resistant aluminized steel framing. High back splash and shelf is standard. Sturdy 6″ stainless steel pipe legs with adjustable feet. Double wall construction with heavy fiberglass insulation assures heat retention for daily money saving fuel efficiency and offers the best installation clearances in the industry. Non-combustible surfaces are 0″ on the sides and 0″ in the rear, combustible surfaces are 2″ on the sides and 2″ in the rear.

OVENS: 3 widths from which to choose; 31½″, 26½″ & 19½″ All ovens measure 20½″ deep x 14″ high. One heavy duty chrome plated wire rack is standard with 3 rack positions spaced approximately 2¾″ apart with 5¾″ between the top rack position and the ceiling. Easy cleaning porcelain coated and aluminized steel oven linings are standard. The ovens feature a durable cast iron "H" pattern burner; 31½″ & 26½″ ovens are rated at 30,000 BTUH, the 19½″ oven is rated at 25,000 BTUH. A special designed baffle directs heat for superior air circulation. Convection option is available, add prefix "C" or "CC" to the model number.

GRIDDLE PLATES: Available in 12″, 18″, 24″, 30″, 36″, 42″ and 48″. Highly polished to minimize food sticking. 3/4″ thick plate is standard, 1″ thick is available. 4″ high splash guard is standard. Higher sides are also available. 21¼″ deep cooking surface with front cold zone grease trough. Grease drain slot is 3.5″ x 1″ and feeds into a seamless, deep, removable grease drawer at the back of the griddle to avoid cross contamination with the cheesemelter rack.

CHEESEMELTER-BROILER: Adjustable heavy duty, nickel plated, cheesemelter racks measure 18″ deep by 6″ less than the width of the griddle.

OTHER BURNERS: 12″ incremental char-broiler models feature cast iron "H" pattern burners, one for each 12″ increment; char-broilers at 25,000 ea. 18″, 30″and 42″ griddle & char-broiler sections feature 2, 4 and 6 straight burners respectively; char-broilers at 20,000 ea. Open burners are cast iron without gaskets, rated at 24,000 BTU's and feature a large 7″ "star" flame pattern.

RAISED GRIDDLE BURNERS: Cast iron "H" pattern burners feature an attached stainless steel flame spreader to radiate heat downward combined with insulated aluminized steel side panels for superior heat reflection and fuel efficiency. One burner BTU inputs are: 12″-20K, 18″-25K, 24″-30K. Two burner BTU inputs are: 30″-50K, 36″-60K. Three burner BTU inputs are: 42″-75K, 48″-90K.

OPEN BURNER GRATES: Open burner grates are 12″ x 12″ solid cast iron with spillover bowl that also reflects heat to the cooking surface for added efficiency and designed for easy movement of pots across top sections.

OPTIONS & ACCESSORIES: Convection fan, 1″ thick plates, char-broilers, safety pilots, grill scrapers, spatulas, cleaning supplies, chrome plating, safety pilot controls, gas hoses, carrying handles, knob protectors and matching equipment stands.

Comstock-Castle Stove Co. • 119 W. Washington St. • Quincy, IL. 62301
Tel.: 217-223-5070 • Fax: 217-223-0007 • www.castlestove.com

RAISED GRIDDLE RANGES MEASUREMENTS

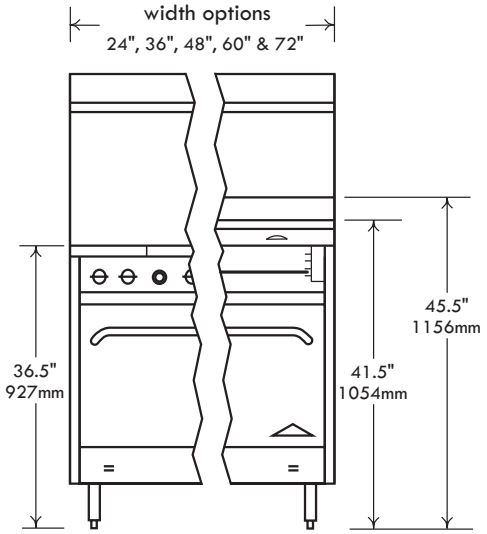

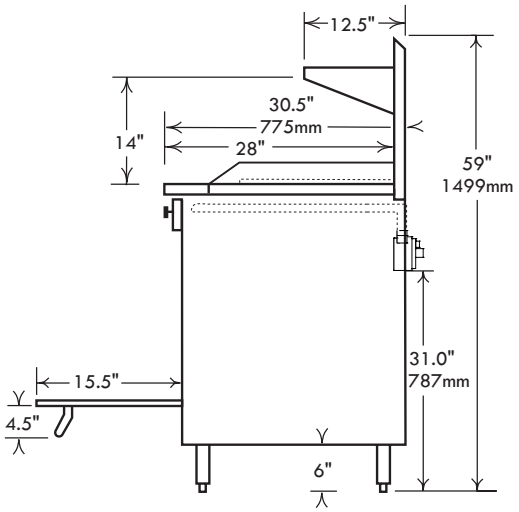

Raised Griddle Ranges (Popular models shown below. Call factory for other model details.)

Cooktop Configuration	Model #	Description Top	Description Base	Total B.T.U.	Approx. Wgt. Kg. / Lbs.
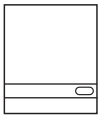	F318-24B	(0) Open Burners & (1) 24″ Raised Griddle	- w/ (1) 19.5″ Oven	55,000	182 / 400
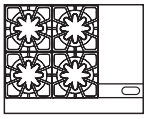	F330-12B	(4) Open Burners & (1) 12″ Raised Griddle	- w/ (1) 31.5″ Oven	146,000	241 / 530
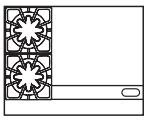	F330-24B	(2) Open Burners & (1) 24″ Raised Griddle	- w/ (1) 31.5″ Oven	108,000	268 / 590
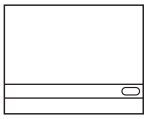	F330-36B	(0) Open Burners & (1) 36″ Raised Griddle	- w/ (1) 31.5″ Oven	90,000	277 / 610
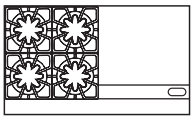	F3218-24	(4) Open Burners & (1) 24″ Raised Griddle	- w/ (2) 19.5″ Ovens	176,000	327 / 720
	F3430-24	(4) Open Burners & (1) 24″ Raised Griddle	- w/ (1) 31.5″ Oven - & 10″ storage space	156,000	320 / 705
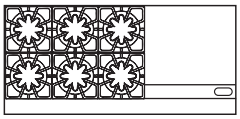	F3226-24B	(6) Open Burners & (1) 24″ Raised Griddle	- w/ (2) 26.5″ Ovens	234,000	400 / 880
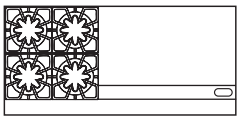	F3226-36B	(4) Open Burners & (1) 36″ Raised Griddle	- w/ (2) 26.5″ Ovens	216,000	427 / 940
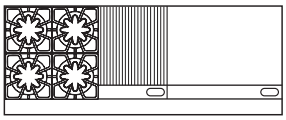	2F330-1.5RB-30B	(4) Open Burners & (1) 18″ Radiant Broiler & (1) 30″ Raised Griddle	- w/ (2) 31.5″ Ovens	246,000	536 / 1180