AccuTemp INNOVATIVE COOKING EQUIPMENT SOLUTIONS

EVOLUTION™ BOILER-FREE STEAMER

N3/P3 SGL Connected Evolution™

One Stand-mounted, 3-Pan, Natural Gas or Propane, Boiler-free, Convection Steamer

Project: _____ Location: _____ Item #: _____ Quantity:_____

Standard Features

- Fast cook times with patented Steam Vector Technology™ (SVT), which utilizes no moving parts
- Cook mode and variable temperature hold mode
- Certified holding cabinet and UL listed
- Steamer powered by a heavy duty stainless steel power burner rated at 50,000 btu/hr
- Easy-to-use digital controls with digital temperature display
- Independent digital electronic timer with programmable preset
- Automatic fill feature
- 2.5 gallon water reservoir
- Uses less than 1 gallon of water per hour
- Simple water and drain connections
- No water filtration or treatment required
- No scheduled deliming
- No warranty exclusions for water quality
- Easy-to-clean control panel
- Dishwasher-safe one-piece wire pan racks and SVT steam collector and distribution panels and front-mounted condensate tray
- Operating and cleaning instructions on door
- Front-mounted drain valve
- Heavy-duty, one-piece field reversible door
- Steamer cavity constructed of reinforced 304 stainless steel
- Specify altitude if over 4,000 ft above sea level
- Internal gas regulator
- Easy-to-access service panel
- Low water, high water and over-temp indicator lights
- 5' power cord with plug included
- Stainless steel support stand
- One year parts and labor warranty
- Lifetime Service & Support Guarantee
- International / Maritime models available; call AccuTemp for more information

Options & Accessories

- Bullet feet or flanged feet
- Stainless steel, ergo-low support stand available with casters, bullet feet or flanged feet
- Steam condenser unit (separate power required)
- Drain tempering kit
- 2" Solid hotel pan
- 2" Perforated hotel pan
- Propane
- Gas quick disconnect hose kit
- Prison package

Safety, Sanitation & Environmental

- UL LISTED Safety Certification (ANSI Z83.11)
- UL EPH Sanitation Certification (NSF 4)

GAS-FIRED C UL US LISTED

CLASSIFIED UL EPH NSF/ANSI 4

ENERGY STAR

MADE IN THE USA

U.S. GREEN BUILDING COUNCIL USGBC

Pan Capacities

Pan Size	Qty.
#200 full size (12x20x2.5")	3
#400 full size (12x20x4")	2

Short Spec

Evolution™ steamer is AccuTemp Products' gas, connected, boiler-free steamer that utilizes AccuTemp's patented Steam Vector Technology™ for faster cook times, improved energy efficiency, better pan-to-pan uniformity, and less water consumption. Steam Vector Technology utilizes no moving parts inside the cooking chamber. Steam is produced inside the cooking cavity with no heating element exposed to water. Certified holding cabinet. Steamer is powered by a heavy duty stainless steel power burner. Easily connects to water, drain and gas lines. Uses less than 1 gallon of water per hour. Steamer includes low water, high water, over-temp warning lights, and auto shut off feature. Evolution includes heavy duty, one-piece field reversible door. Standard digital controls with independent timer. No water quality exclusions to warranty and no water filtration or treatment required. Lifetime Service & Support Guarantee. Steamer is UL Safety and Sanitation Certified, and ENERGY STAR® qualified. Made in the USA.

N3 Evolution™ model shown on stand with casters

AccuTemp product may be covered by one or more US Patents. See www.accutempip.net

MM4260-2607

AccuTemp Products, Inc.
800-210-5907 | accutemp.net

AccuTemp INNOVATIVE COOKING EQUIPMENT SOLUTIONS

EVOLUTION™ BOILER-FREE STEAMER

N3/P3 SGL Connected Evolution™

One Stand-mounted, 3-Pan, Natural Gas or Propane, Boiler-free, Convection Steamer

Gas Steamer Model Specifications SGL = ONE CAVITY ON STAND		
Model #	*N31201E060 SGL*	*P31201E060 SGL*
Gas Supply	*Natural Gas*	*Propane*
Recommended Gas Feed Rate	*5" wc min 14" wc max*	*12" wc min 14" wc max*
Gas Operating Pressure	*3.5" wc*	*10.0" wc*
Maximum input BTU's/hr	*50,000*	*50,000*
Electrical Powered	*120v, Single Phase, 60hz, 1 AMP*	
NEMA Plug	*5-15 three prong plug*	

Notes:

1. *Allow 3" between fryer, ranges, and other hot surfaces.*
2. *Each steamer is equipped with a 5' power cord with NEMA 5-15 three prong plug, 120v, single phase, 60hz, 1 AMP supplied.*
3. *Each steamer is equipped with ½" NPT threaded natural gas or propane connection. ¾" gas line is required for proper operation.*
4. *Steamer dimensions in line drawings are in inches and [millimeters].*
5. *Each steamer is equipped with ¾" male garden hose connector for water supply.*
6. *Each steamer is equipped with ¾" barbed drain line connector.*
7. *DO NOT plumb a single drain line between 2 steamers. Each steamer must have a separate open gap type drain line.*
8. *Commercial use only.*
9. *Each steamer is equipped with internal gas regulator.*
10. *AccuTemp steamers can be placed on a commercial kitchen countertop or installed on an AccuTemp steamer stand. Do not place directly onto any kind of heat source.*

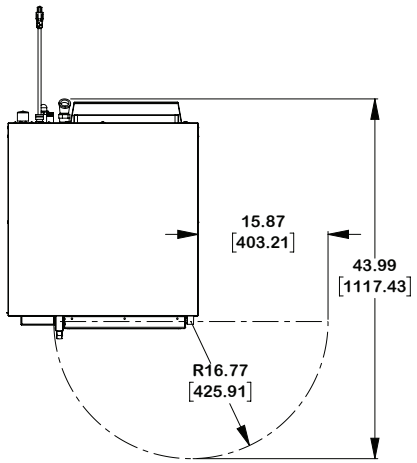

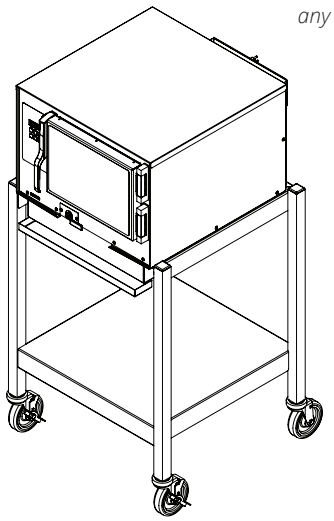

HEIGHT OF STAND WITH BULLET FEET OR FLANGED FEET:
48.56 [1233.42]

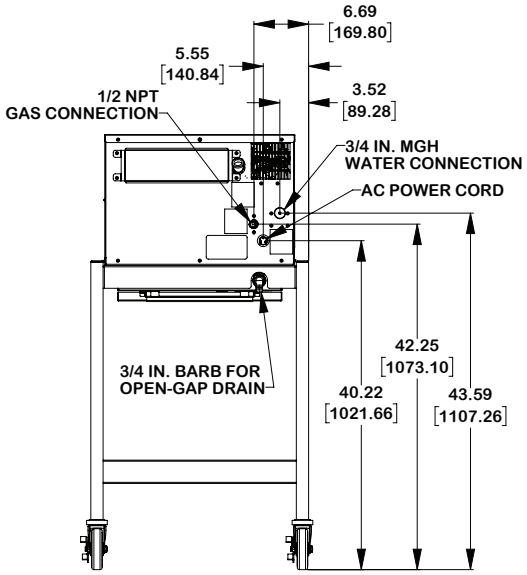

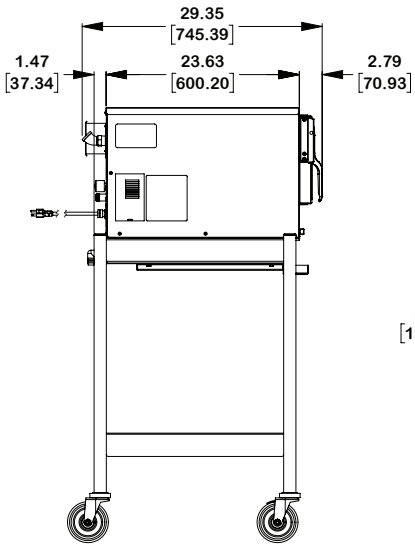

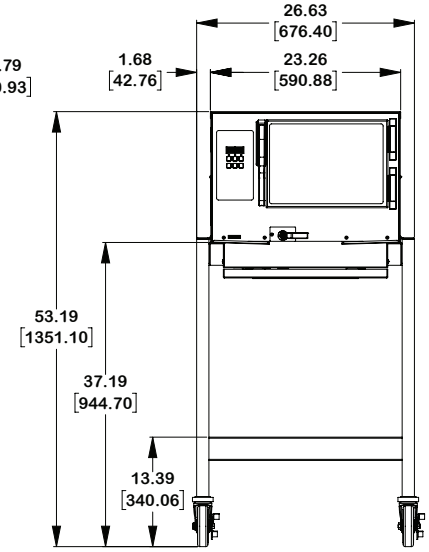

AccuTemp product may be covered by one or more US Patents. See www.accutempip.net

AccuTemp Products, Inc.
800-210-5907 | accutemp.net