Shown with optional drain pan accessory. Required unless installed over a sink.

ID50X

50 lb metered ice dispenser

Model configuration			
Ice storage capacity	Configuration	Dispense	**Item number**
50 lb (22.7 kg)	ice dispenser	Push button	**ID50X**

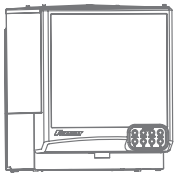

Installation above a sink; no drain pan required

Features

Capacity and configurations

- 50 lb (22.7 kg) ice storage capacity
- compatible with Follett Horizon Elite™ ice machines
- automatically fill the dispenser via a single ice transport tube or an Ice Manager™ diverter valve system; top-mount ice machine configuration not available

Built for efficiency

- consistent, reliable dispensing
- repeatable beverage quality
- faster speed of service
- less employee training
- labor savings
- increased customer throughput, reducing wait times

Reliable ice delivery

- 12 programmable dispense amounts plus manual dispensing
- dispenses from 2 to 32 oz per button push
- dispenses customer-preferred Chewblet® ice only

Warranty[1]

- 3 years parts and labor

Certifications (applied to all products unless otherwise noted)

NSF c UL US LISTED

Options and accessories[2]

Drain pan (includes drain pan assembly, tubing and nuts) (item# 01597053)

Note: Drain pan required unless the unit is installed over a sink to capture minimal dripping from the ice chute.

[1] Refer to form# 4025 for additional warranty information.
[2] Certifications do not apply to options and accessories.

801 Church Lane | Easton, PA 18040, USA
1.800.523.9361 | 1.610.252.7301 | follettice.com

FOLLETT®

Specification

Ice storage capacity	50 lb (22.7 kg)
Width	21.31" (54.13 cm)
Depth, upper cover	24.60" (62.49 cm)
Depth, ice chute	18.92" (48.06 cm)
Height	26.02" (66.09 cm)
Service clearance	12.00" (30.50 cm) top
115 V/60/1 electrical	0.5 amps, 8' (2.4 m) cord, NEMA 5-15 45º
Hopper drain	3/4" MPT
Hopper drain tube recommendation	3/4" ID 1/8" minimum thickness, with added insulation
Optional drain pan accessory drain	includes 1/2" ID x 3/4" OD silicone tube
Utility connection location	through bottom
Minimum span – wall bracing required in most applications	16.00" (40.64 cm) on center NOTE: Wall mount bracket standard
Approximate net weight	86 lb (39 kg)
Approximate ship weight	118 lb (54 kg)
NOTE: For indoor use only	

Wall mount bracket

Typical wall mount installation

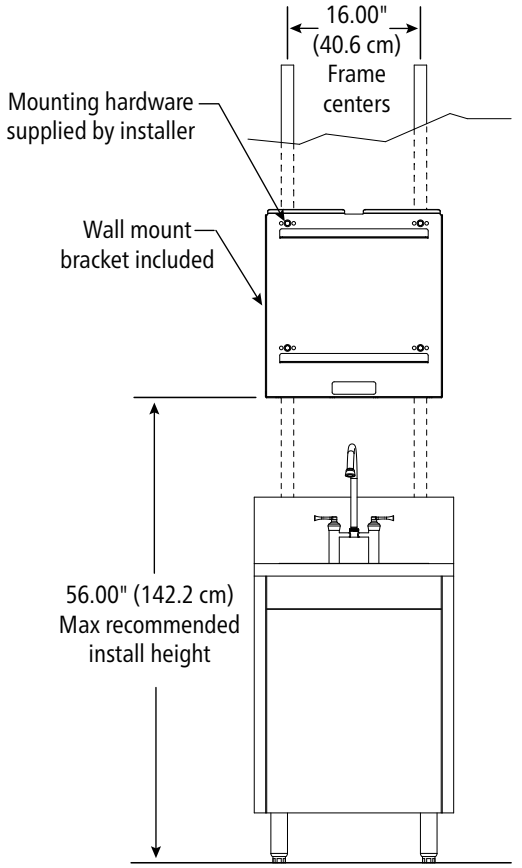

Dimensional drawing

Front View

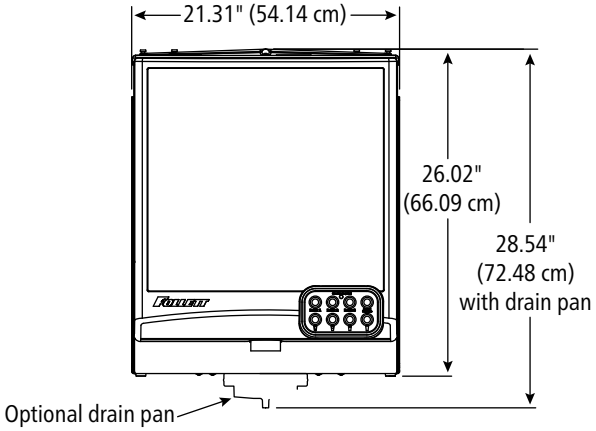

Right Side View

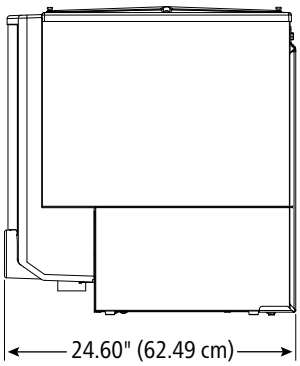

Bottom View

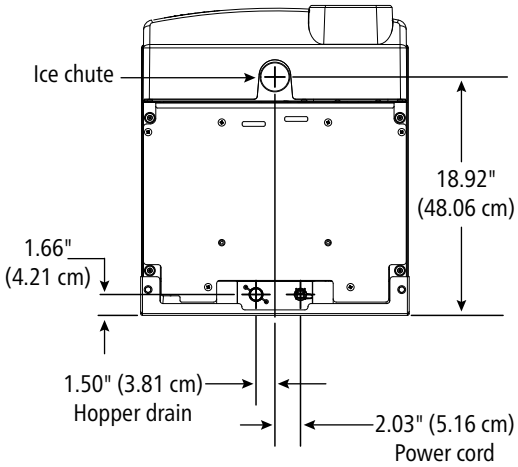

HORIZON ELITE and ICE MANAGER are trademarks of Follett Products, LLC.
CHEWBLET and FOLLETT are registered trademarks of Follett Products, LLC, registered in the US.
Follett reserves the right to change specifications at any time without obligation. Certifications may vary depending on country of origin.

801 Church Lane | Easton, PA 18040, USA
1.800.523.9361 | 1.610.252.7301 | follettice.com