23-12 MINI WEDGE 2 x 4 COMBO

MANUAL FLOUR TORTILLA WEDGE PRESS AND GRILL

- Small Tortilla Flexibility!
- Single-Person Operation
- Energy Efficient and Easy to Operate!

SPECIFICATIONS

2'x 4' (61cm x 122 cm) Tortilla Grill

Dimensions w/ Model 33N Grill:
L 77" x W 36" x H 47"
L 196cm x W 91cm x H 120cm

Tortilla Production:
Up to 500 Ready-to-Cook
Tortillas per hour

Tortilla Diameter:
4" / 10cm to 7" / 18cm

*Tortilla production may vary due to operator experience,diameter and thickness of tortillas.

23-12 MINI WEDGE PRESS

Receptacle:
NEMA 5-20R
(125V-)

Plug:
NEMA 5-20P
(125V-)

33N (2'X4') TORTILLA GRILL

Receptacle:
NEMA 14-60R
(125-250V-)

Plug:
NEMA 14-60P
(125-250V-)

MINI WEDGE COMBO #3

INCLUDES MODELS:

* 23-12 120V Mini Wedge Press
* 33N 2' X 4' Counter Top Tortilla Grill
* 84A Mini Wedge 2'x4' Grill Stand

* Combo #3 Shown here

*BE&SCO equipment is solely intended for use in a commercial facility.

BE&SCO MANUFACTURING®
200 Lombrano St · San Antonio, TX 78207 USA
Office: (210) 734-5124 · Fax: (210) 737-3925
Toll Free: 1-800-683-0928
Email: sales@bescomfg.com · Website: www.bescomfg.com
Visit our website to view video www.bescomfg.com

Certifications Applicable to Press and Grill Only
*Certifications Not Applicable to Stands

Revised: 07/20/2020
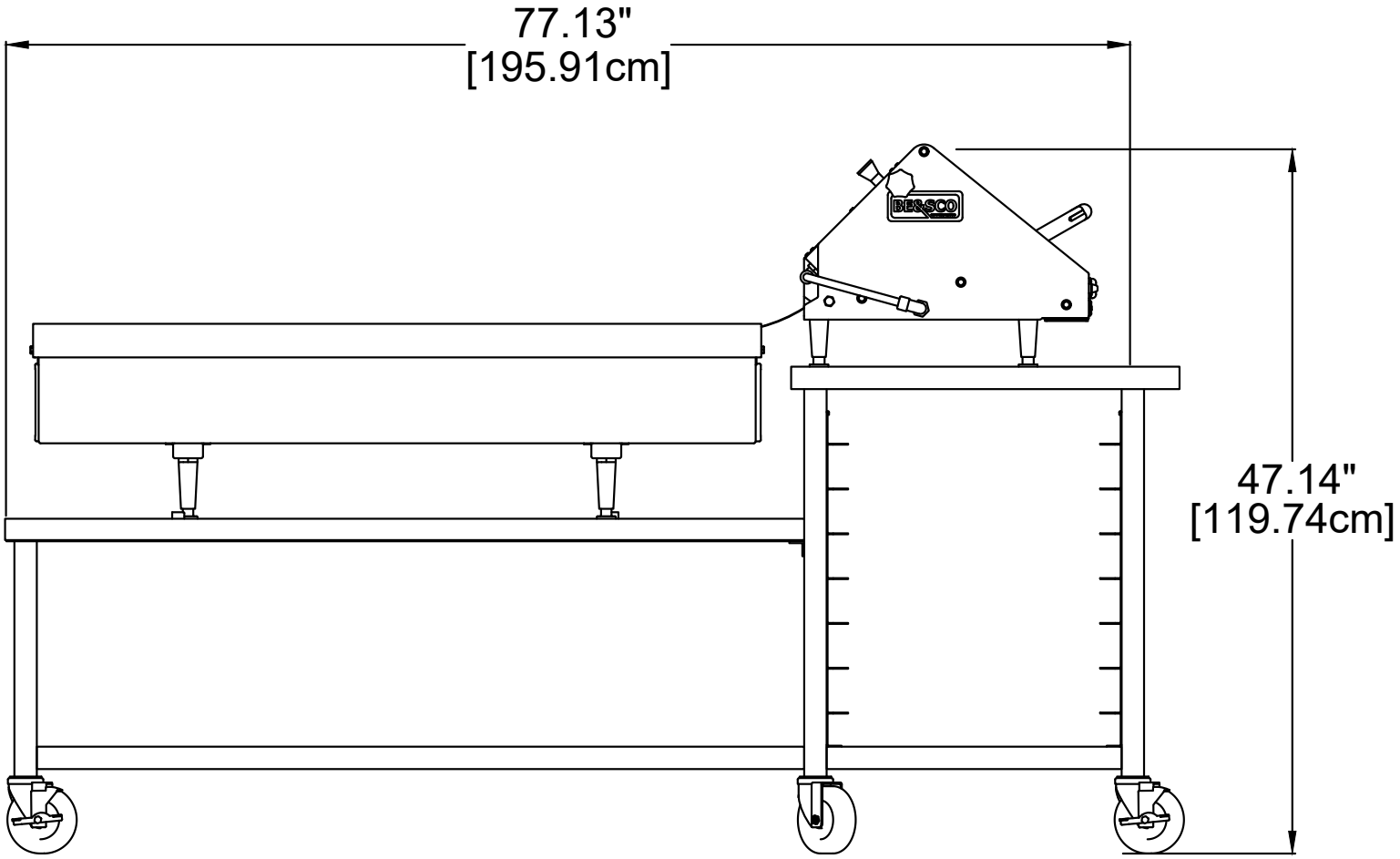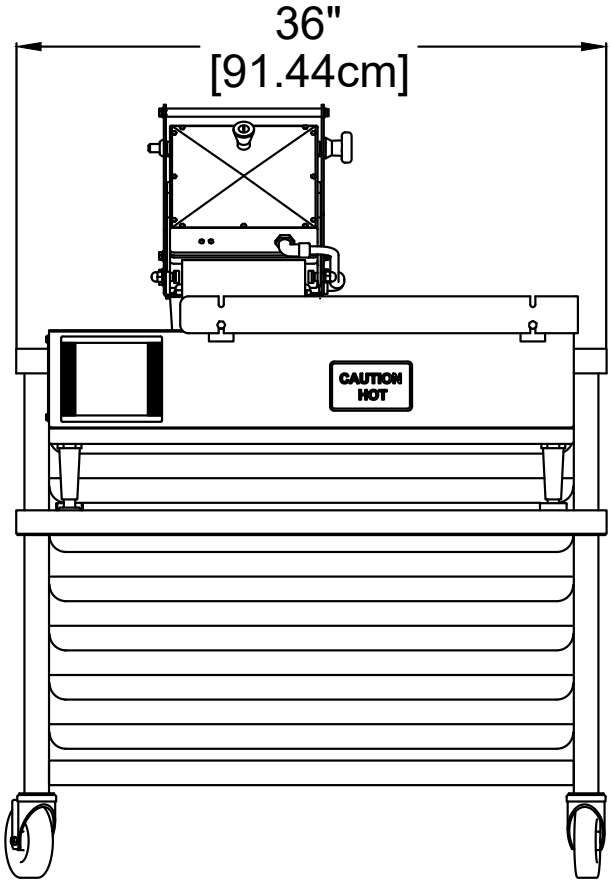
Mini Wedge Press 2 x 4 Grill Combo