Crysalli
Artisan Water

Project:

Scan for more info!
Owners Manual
Quick Install
Quick Sizing
Install Layout
Parts List

CR-804-001

Low Volume Water Boost System

Features

- Increases flow and pressure to sparkling and still water systems
- Ideal for applications where dynamic water pressure to filter systems is lower than 45 PSI
- Maximizes filter life on filtration systems
- Self priming pump can run without damage
- Eliminates water pressure fluctuation at point of dispense
- Low profile allows for undercounter installation
- Complete turn-key package
- NSF Certified components

Specifications

- Accumulator: 24 oz glass filled nylon accumulator
- Pre-charge with 40 PSI air at time of installation
- 90 PSI boost
- Max Draw Down: 10 oz
- Water inlet/outlet connections: 3/8" JG push-fit connections
- Operating temperature range: 34°-120°F
- Electrical: 115 VAC/1 Amp
- Weight: 8 lbs
- 9.84"W x 10.24"D x 4.6"H
- Install water boost prior to filtration system

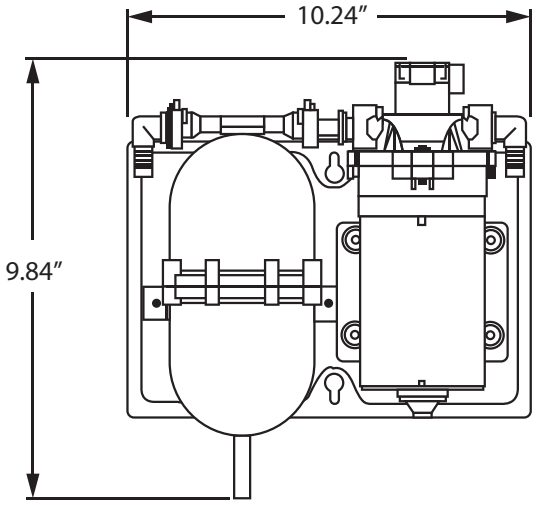

Plumbing Sequence for water boost system

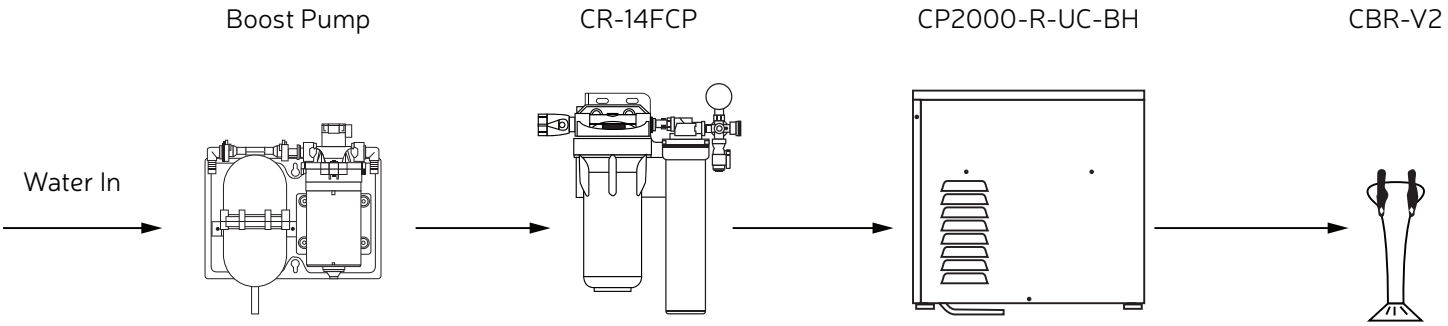

Optional Accessories: