Royal Series Plumbing
Wrist Blade Deck Mount Restroom Faucet

Model: **14-540L** Item #: _____ Date: _____

Project: _____ Qty: _____ Approved By: _____

Product Image

Standard Features

- Heavy Duty
- 4” Centers
- 1/2 turn Ceramic Cartridge Valves
- Wrist Blade Handles
- Solid Brass Construction
- 0.5 GPM aerator installed (1.5 GPM aerator included)
- Replacement Parts Available

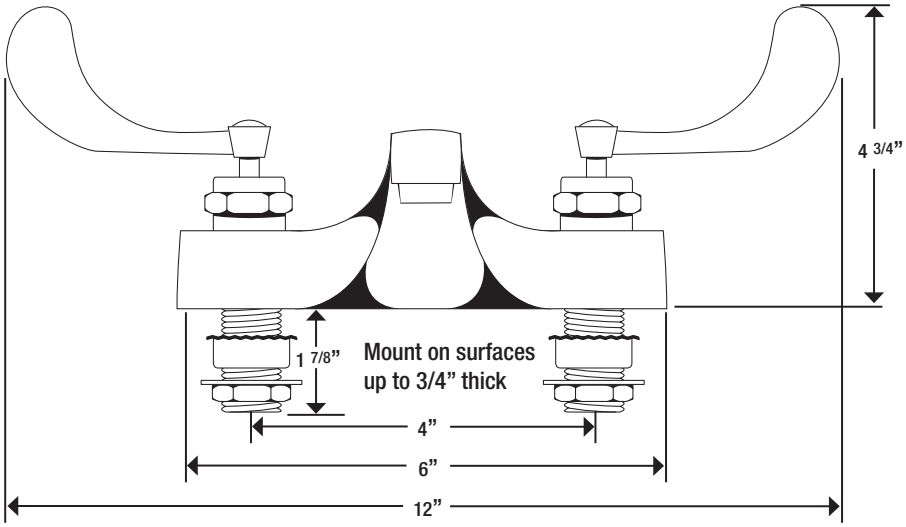

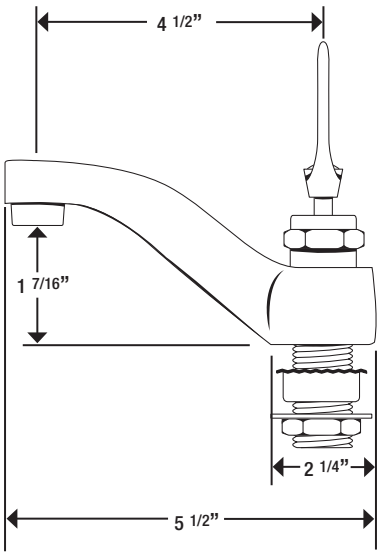

Certified to NSF/ANSI 61-G

Krowne Metal Corporation • 100 Haul Rd. Wayne, NJ 07470 • Toll Free: (800) 631-0442 • Fax: (973) 872-1129 • sales@krowne.com • krowne.com

Due to our commitment to continued product improvement, specifications are subject to change without notice.

Rev. 11/2015 • No. 14-540L

Royal Series Plumbing
Wrist Blade Deck Mount Restroom Faucet

Model: **14-540L** Item #: _____ Date: _____

Project: _____ Qty: _____ Approved By: _____

NO.	Item	Model #
1	Wrist Blade Handles Kit	21-311L
2	Hot Cartridge Valve	21-309L
3	Cold Cartridge Valve	21-308L
4	0.2 GPM Aerator 0.5 GPM Aerator 1.0 GPM Aerator 1.5 GPM Aerator 2.2 GPM Aerator	22-590L 22-620L 22-621L 22-625L 22-628L
5	Faucet Body	14-540L
6	Mounting Kit	21-197

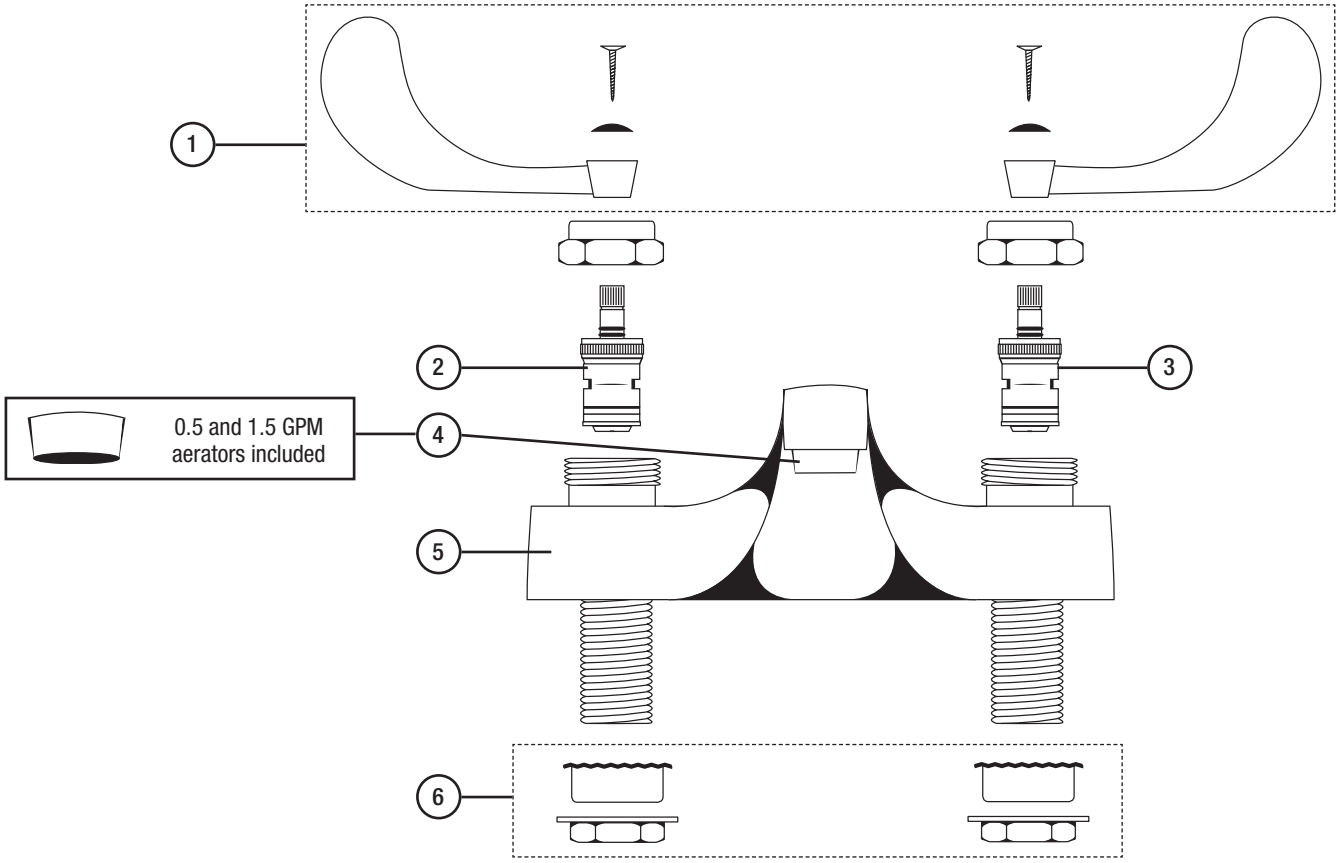

Certified to NSF/ANSI 61-G

Krowne Metal Corporation • 100 Haul Rd. Wayne, NJ 07470 • Toll Free: (800) 631-0442 • Fax: (973) 872-1129 • sales@krowne.com • krowne.com

Due to our commitment to continued product improvement, specifications are subject to change without notice.

Rev. 11/2015 • No. 14-540L