PROJECT: _____

ITEM # _____ QTY: _____

MODEL # _____

AIA # _____ SIS # _____

VICTORY ELITE™ TOP MOUNT FREEZER

VEFSA-2D-HD-HC

POWERED BY V-CORE

EXCLUSIVE WARRANTY

- 6 Year Parts & Labor Warranty
- 7 Year Compressor Warranty
- Exclusive 2 Year Warranty On Magnetic Door Gaskets
- Lifetime Warranty On Handles & Hinges (parts only)

CABINET CONSTRUCTION

- Stainless Steel Front, Gray Coated Sides
- Aluminum Interior
- Snap-In, Magnetic Door Gasket(s)
- Heavy Duty Cam Lift Hinges
- Stay-Open Door Feature For Easy Product Loading
- Required Clearance Is 12" Top, 3" Rear And 0" Sides
- 6" Casters
- 8' Cord And Plug

FEATURES

- High Performance Refrigeration System With An Electronic Control
- Expansion Valve Technology
- Energy Efficient LED Lighting
- 6 Heavy Duty Epoxy Coated Shelves

REFRIGERATION

- Refrigeration System Uses R-290 Refrigerant To Comply With All Environmental Concerns
- Hot Gas Condensate Evaporator
- Adaptive Defrost For Reduced Energy Consumption And More Consistent Product Temperatures
- Epoxy Coated Evaporator Coil, Located Out Of The Food Zone
- Freezer Capable Of Maintaining Product Temperature Down To -10°F

ENERGY STAR

Please Verify Qualifying Units By Visiting:
www.energystar.gov/cfs

OPTIONS & ACCESSORIES

- Stainless Steel Back
- Stainless Steel Interior
- Stainless Steel Exterior
- Stainless Steel Breaker
- Tray Slides
- 6" Legs Or 3" Casters (no charge at time of order)
- Seismic/Flanged Legs
- Additional Shelves: Heavy Duty Epoxy Coated Chrome Plated Or Stainless Steel
- Remote Models* (6" legs only) (refrigerant must be specified at time of order, see not on back page)

3779 Champion Blvd, Winston-Salem, NC 27105

ph: (888) 845-9800 | fax: (800) 253-5168

Sales@VictoryRefrigeration.com | VictoryRefrigeration.com

Rev. 9/28/23 Printed in U.S.A.

APPROVAL: _____ DATE: _____

VICTORY ELITE™ TOP MOUNT FREEZER

VICTORY ELITE™ TOP MOUNT FREEZER

VEFSA-2D-HD-HC

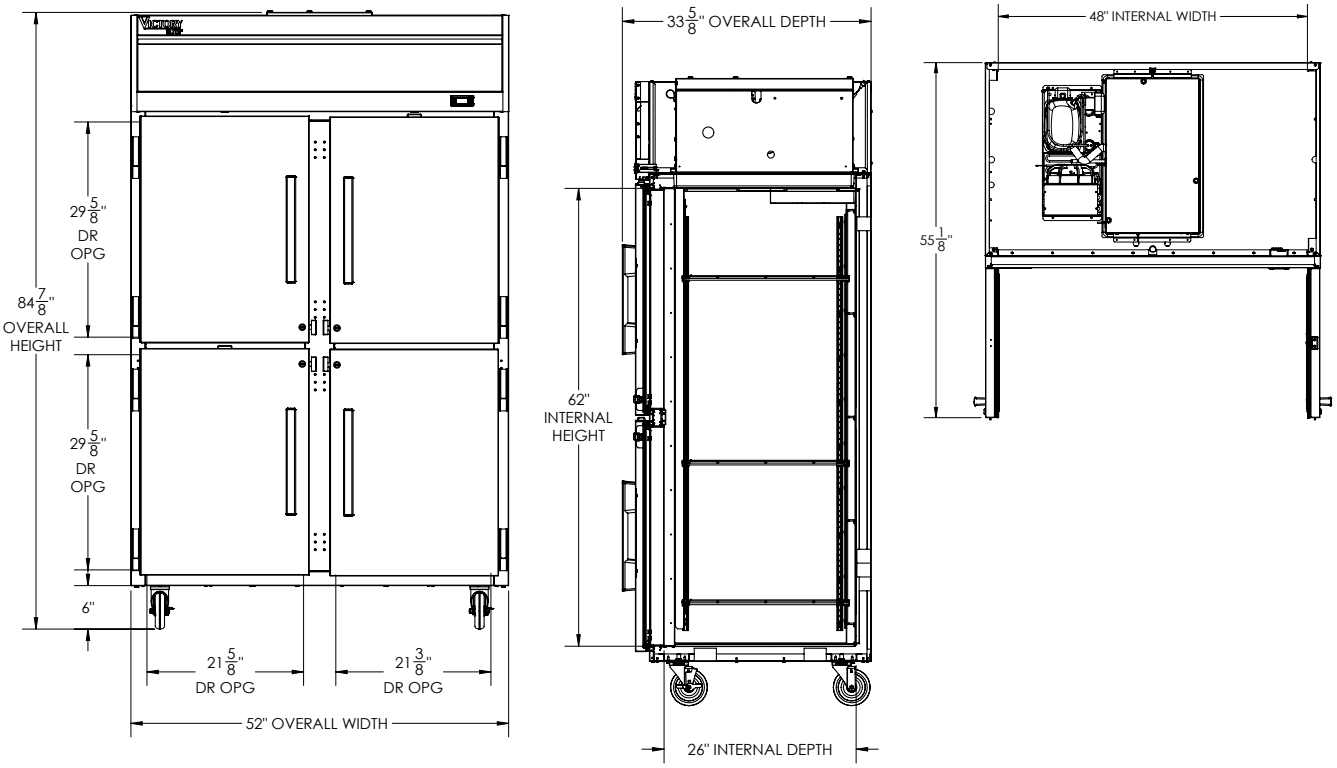

We reserve the right to change specifications and product design without notice. Such revisions do not entitle the buyer to corresponding changes, improvements, additions or replacements for previously purchased equipment. Dimensional tolerances +/- 1/4". Metric dimensions (MM)

12" Top and 3" rear clearance is required

CHARACTERISTICS		ELECTRICAL DATA		SHIPPING DETAILS	
Net Capacity (cubic ft.)	45.2	Cabinet Voltage	115/60/1	Height	88"
Width, Overall (in.)	52"	Total Amperes	10.0	Width	54"
Depth, Overall (with handles)	33 5/8"	NEMA Plug* (8' cord)	5-15P	Depth	36"
Height Overall (6" casters)	84 7/8"	**REFRIGERATION DATA**		Crated Weight	570 lbs
Depth, Door Open 90°	55 1/8"	Condensing Unit Size, HP*	3/4+	*NOTE: Remote units are field wired and comes with 6" legs. Refrigerant must be specified at time of order.	
Door Openings (in.)	21 5/8" x 29 5/8" 21 3/8" x 29 5/8"	Refrigerant*	R290		
No. Of Doors/Shelves	4/6	Capacity (BTU/HR) (100°F/-20°F)	2580		
		Heat Rejection (BTU/HR)	3870		
		Charge (lbs/grams)	0.2866/130		

3779 Champion Blvd, Winston-Salem, NC 27105 | ph: (888) 845-9800 | fax: (800) 253-5168

Sales@VictoryRefrigeration.com | VictoryRefrigeration.com

Rev. 9/28/23 Printed in U.S.A.

an Ali Group Company

The Spirit of Excellence