HSM Series
Heated Shelf Merchandiser

HSM-36/2S/T, HSM 36/3S/T & HSM-36/5S/T

UL

Featuring exclusive Halo Heat® technology, Alto-Shaam heated shelf merchandisers provide precise top and bottom heat for the highest quality prepared food and longer hold times.

Hold a variety of grab-and-go products, including rotisserie chickens, pizza, sandwiches, and more. Drive foodservice profits with hot, ready-to-eat meals. Convenient, fresh meals are displayed in an aesthetically pleasing, customizable merchandiser.

Experience better quality food with gentle, even and precise Halo Heat® fanless technology to keep food from drying out.

Flexibility to control individual shelf temperatures allows you to hold a variety of products at the proper temperature.

Boost impulse sales with LED-lighted shelves, customized branding, backlit interchangeable graphics, pricing rails and window sides.

Simple operation and easy cleaning keeps delis and grab-and-go areas operating smoothly.

Easy-to-load shelves–pass-through option available for added convenience.

Made in the USA with a commitment to quality. Alto-Shaam is ISO 9001:2015-certified.

Standard Features

- Adjustable thermostat per shelf with a heat-on indicator light
- Latched access panel on the front of the merchandiser
- Four casters (floor standing models); four legs (countertop models)

---

16 **HSM-36/2S/T:**
Two (2) 32-7/8" (835mm) width shelves,
Eight (8) chicken boats with dome cover per shelf.

24 **HSM-36/3S/T:**
Three (3) 32-7/8" (835mm) width shelves,
Eight (8) chicken boats with dome cover per shelf.

40 **HSM-36/5S/T:**
Five (5) 32-7/8" (835mm) width shelves,
Eight (8) chicken boats with dome cover per shelf.

HSM-36/3S/T: 48 lb (22 kg)	24 lb (11 kg) per shelf
HSM-36/3S/T: 72 lb (33 kg)	24 lb (11 kg) per shelf
HSM-36/5S/T: 120 lb (54 kg)	24 lb (11 kg) per shelf

c UL us LISTED COOKING APPLIANCE 584m

ANSI/NSF 4



HSM-36/2S/T HSM-36/5S/T HSM-36/3S/T

Configurations (select one)

Model

- ☐ HSM-36/2S/T
- ☐ HSM-36/3S/T
- ☐ HSM-36/5S/T

Electrical

- ☐ 120V, 1PH (HSM-36/2S/T only)
- ☐ 208–240V, 1PH

Door Options

- ☐ None (reach-in models only)
- ☐ Rear slide (pass-through models only)
- ☐ Rear swing (pass-through models only)
- ☐ Front swing (reach-in and pass-through models)

Legs or Casters (floor standing)

- ☐ 4"–6" (102mm–153mm) adjustable legs (5025454)
- ☐ 3" (76mm) casters (Standard)

Legs or Display Base (countertop)

- ☐ 4"–6" (102mm–153mm) adjustable legs: (Standard) (5026182)
- ☐ HSM-36/3S Display Base, with casters (5026176)
- ☐ HSM-36/3S Display Base, with legs (5026182)

Accessories (select all that apply) qty

Note: Unit ships without graphics unless selected

- ☐ Signage panel, POP Display
- ☐ Signage panel, shelf — Rotisserie Chicken
- ☐ Signage panel, shelf — Hot Sandwiches
- ☐ Signage panel, shelf — Barbecue Ribs
- ☐ Signage panel, shelf — Hot & Tasty
- ☐ Signage panel, shelf — Grab & Go
- ☐ Signage panel, shelf — Hot & Fresh
- ☐ Shelf insert for magnetic signage panels, HSM-36 (1027305).
  Magnetic signage panels to be provided by customer.

HSM Series

HSM-36/5S/T

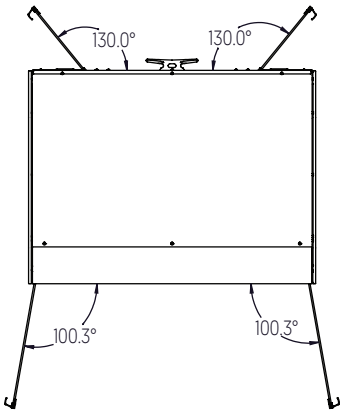

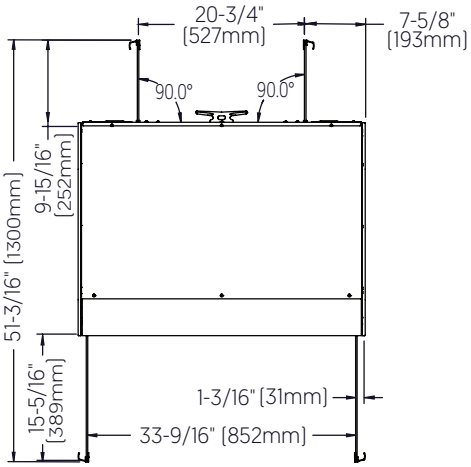

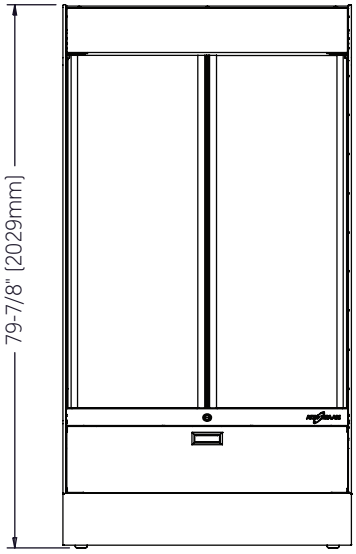

FRONT WITH DOORS & CASTERS

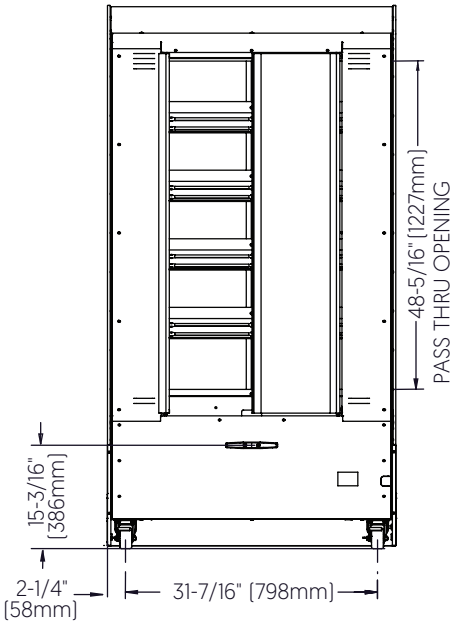

BACK VIEW WITH SWING DOOR

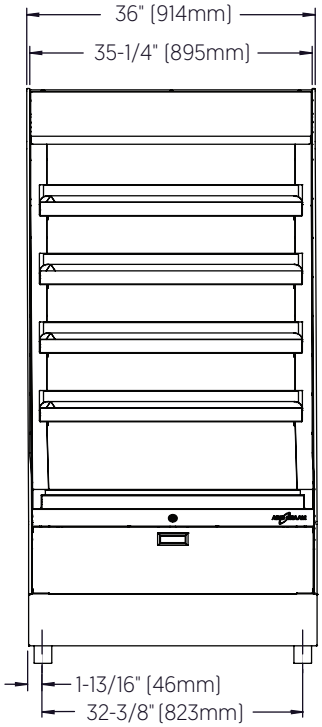

FRONT WITH FEET

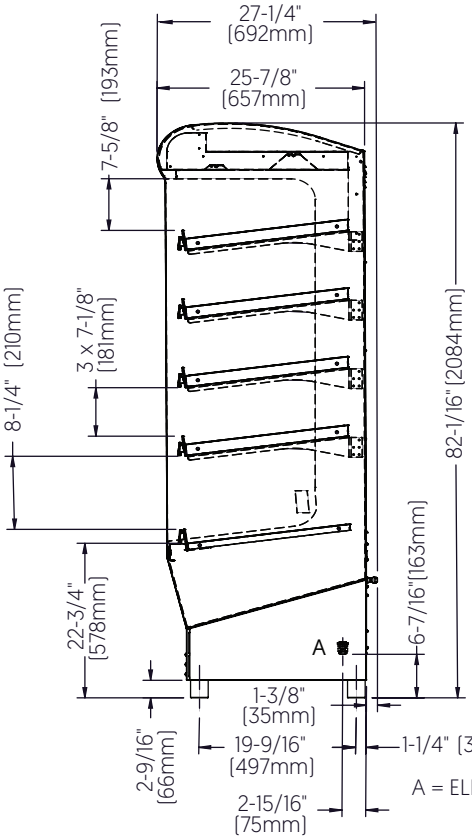

A = ELECTRIC CONNECTION

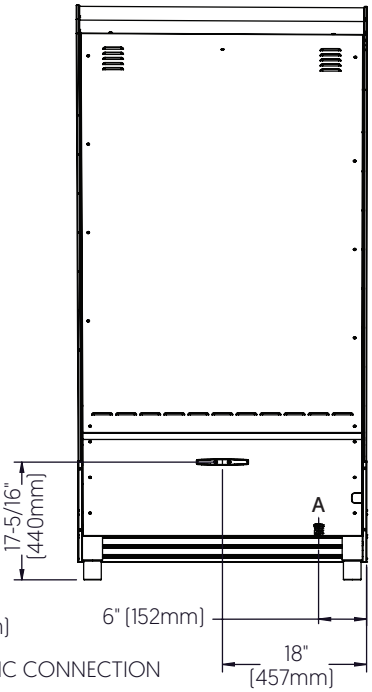

HSM Series
HSM-36/3S/T

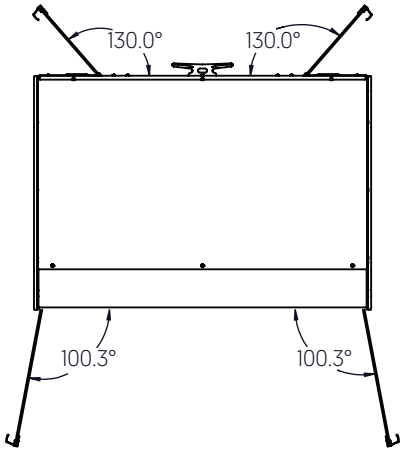

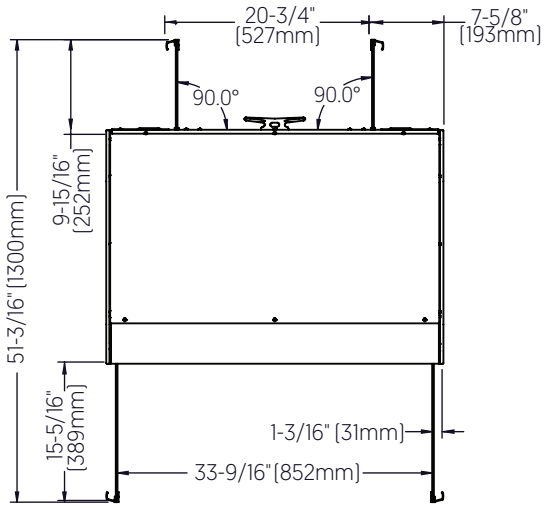

HSM-36/3S TOP

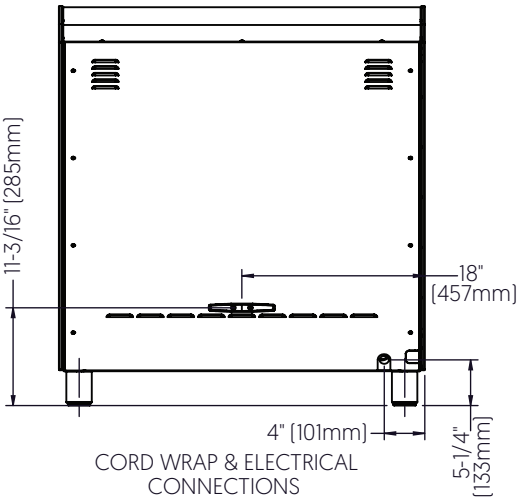

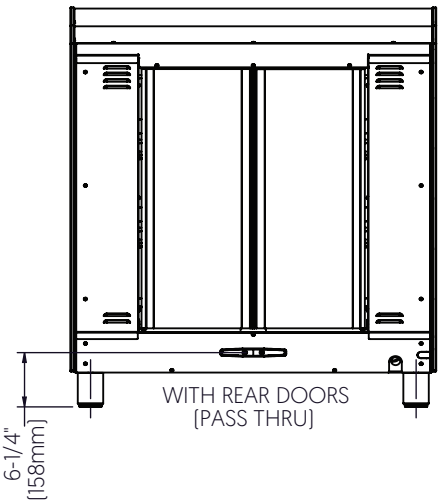

HSM-36/3S BACK

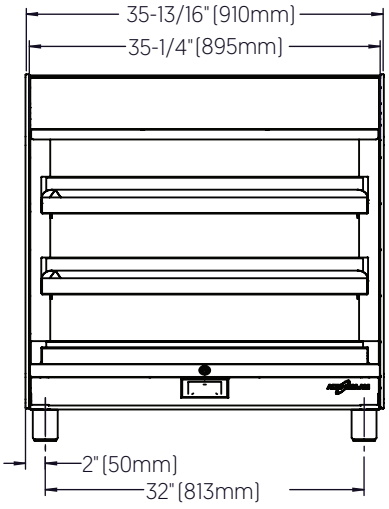

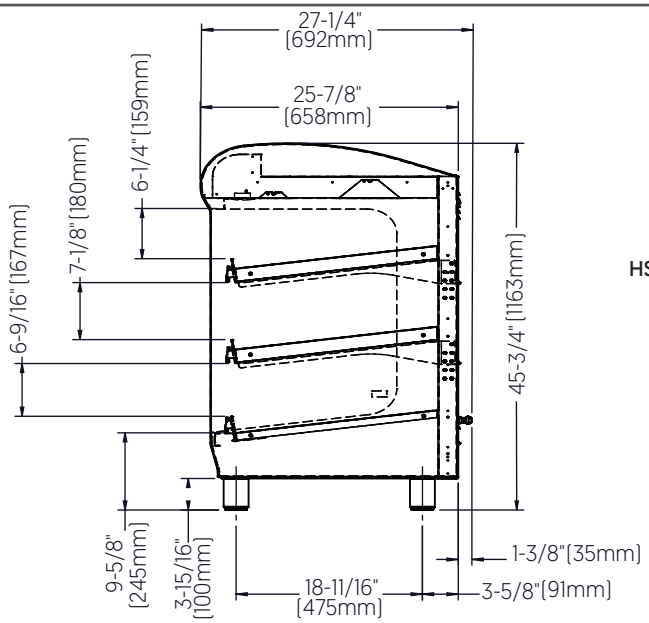

HSM-36/3S FRONT

HSM Series HSM-36/2S/T

ALTO-SHAAM



HSM Series HSM-36

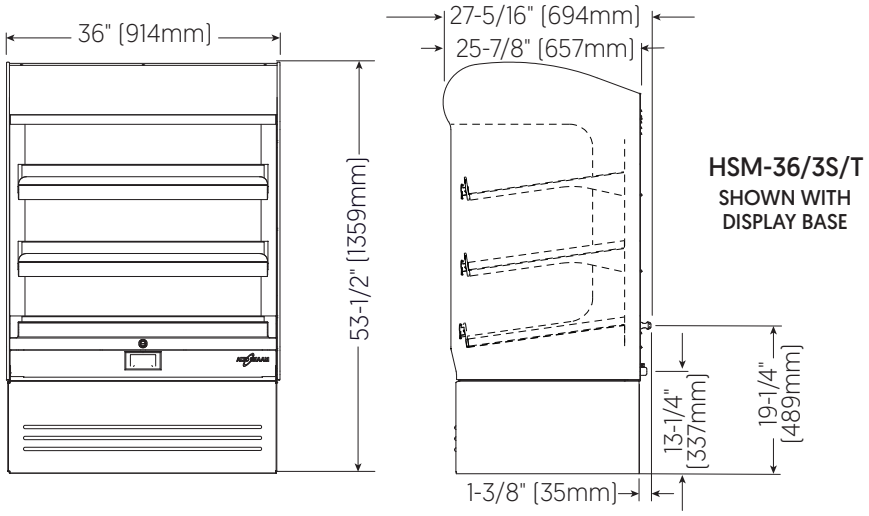

HSM-36/3S/T
SHOWN WITH DISPLAY BASE

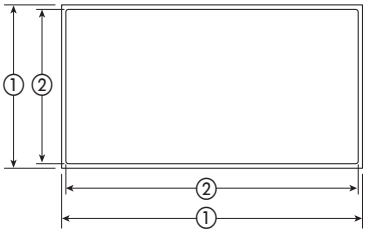

Shelf Dimensions (W x D)
① = Overall ② = Heated Surface

① 32-7/8" x 20-1/2" [835mm x 521mm]
② 31-7/8" x 19-1/2" [810mm x 495mm]

Model	Exterior (H x W x D)	Net Weight
HSM-36/2S/T	35-7/8" x 36" x 27-1/4" [910mm x 914mm x 692mm]	224 lb [102 kg]
HSM-36/3S/T	45-3/4" x 3" x 27-1/4" [1167mm x 914mm x 692mm]	311 lb [141 kg]
HSM-36/5S/T	82-1/16" x 36" x 27-1/4" [2084mm x 914mm x 692mm]	496 lb [225 kg]
	Ship Dimensions (L x W x H)*	**Ship Weight***
HSM-36/2S/T	56" x 45" x 64-1/2" [1422mm x 1143mm x 1638mm]	372 lb [169 kg]
HSM-36/3S/T	56" x 45" x 64-1/2" [1422mm x 1143mm x 1638mm]	462 lb [210 kg]
HSM-36/5S/T	56" x 63" x 89" [1422mm x 1600mm x 2261mm]	590 lb [268 kg]

*Domestic ground shipping information. Contact factory for export weight and dimensions.

ELECTRIC

HSM-36/2 S/T	V	Ph	Hz	Awg	IEC	A	Breaker [A]	kW	Plug Configuration	Certification
120V	120	1	60	12	—	13.2	15	1.6	NEMA 5-15P [USA] NEMA 5-20P [Canada]	c UL us LISTED COOKING APPLIANCE 584m; ANSI/NSF 4
208–240V	208	1	60	12	—	8.8	15	1.3	No cord, no plug	
	240	1	60	12	—	10.0	15	1.7		

Electrical connections must meet all applicable federal, state, and local codes.
Dedicated circuit required.

HSM-36/3S/T	V	Ph	Hz	Awg	IEC	A	Breaker [A]	kW	Plug Configuration	Certification
208–240V	208	1	50/60	10	—	8.8	15	1.8	No cord, no plug	c UL us LISTED COOKING APPLIANCE 584m; ANSI/NSF 4
	240	1	50/60	10	—	10.0	15	2.4		

Electrical connections must meet all applicable federal, state, and local codes.
Dedicated circuit required.

HSM-36/5S/T	V	Ph	Hz	Awg	IEC	A	Breaker [A]	kW	Plug Configuration	Certification
208–240V	208	1	50/60	8	—	14.6	25	3.0	No cord, no plug	c UL us LISTED COOKING APPLIANCE 584m; ANSI/NSF 4
	240	1	50/60	8	—	16.7	25	4.0		

Electrical connections must meet all applicable federal, state, and local codes.
Dedicated circuit required.

CLEARANCE

Rear: 4" [102mm]

Recommended: 18" [457mm] for service access. Charges in connection with inadequate service access is not covered under warranty.

CHECK FIRST

- Merchandiser must be installed level.
- Merchandiser must not be installed in any area where it may be affected by steam, grease, dripping water, high temperatures, or any other severely adverse conditions.

CONTACT US

W164 N9221 Water Street | Menomonee Falls, Wisconsin 53051 | U.S.A.
Phone: 262.251.3800 | 800.558.8744 U.S.A./Canada | Fax: 262.251.7067 | alto-shaam.com

Due to ongoing product improvement, specifications are subject to change without notice.