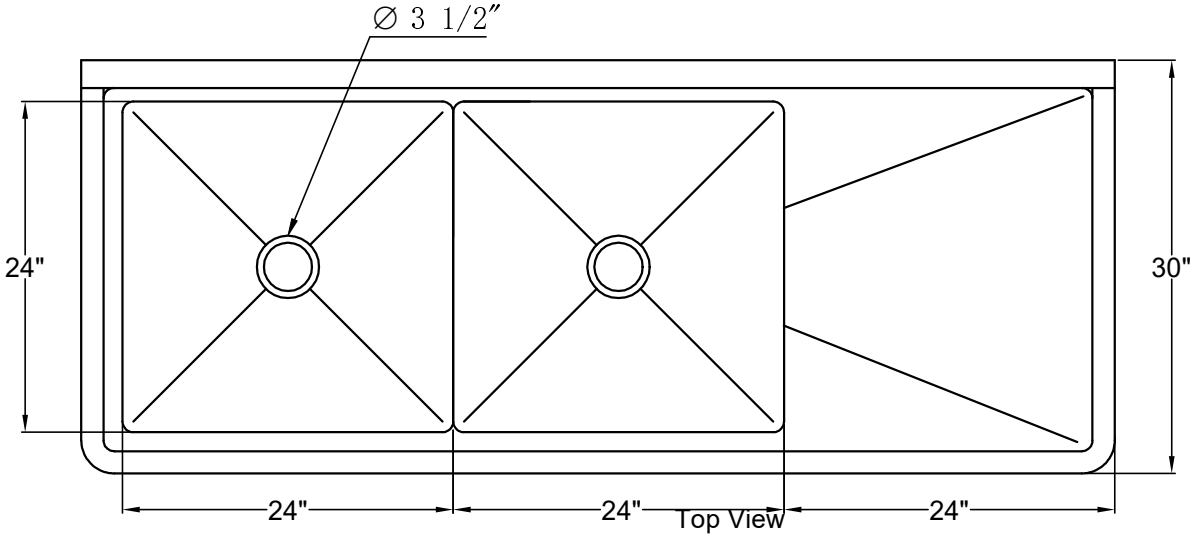

Top View

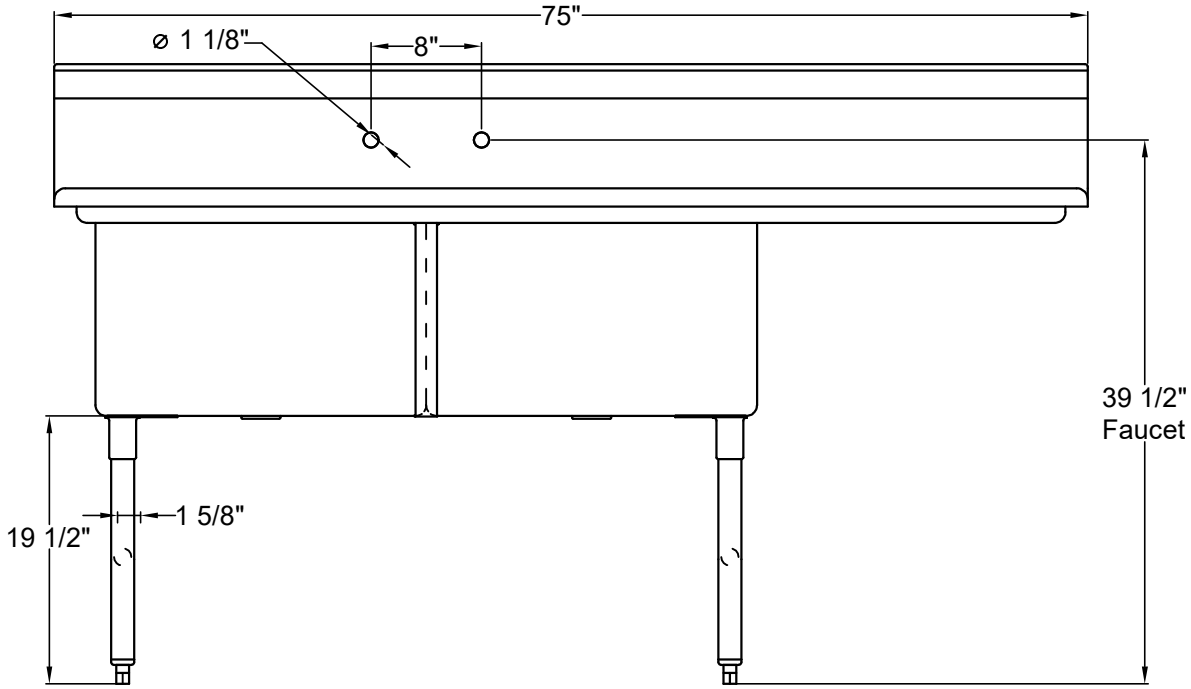

Front View

Front View

Stainless Steel with Endless Appeal

SEH-24242R

- Two Tub Sink with drainboard on right.
- Bowl Size: 24"W x 24"L x 14"D.
- Strainer Opening diameter 3-1/2".

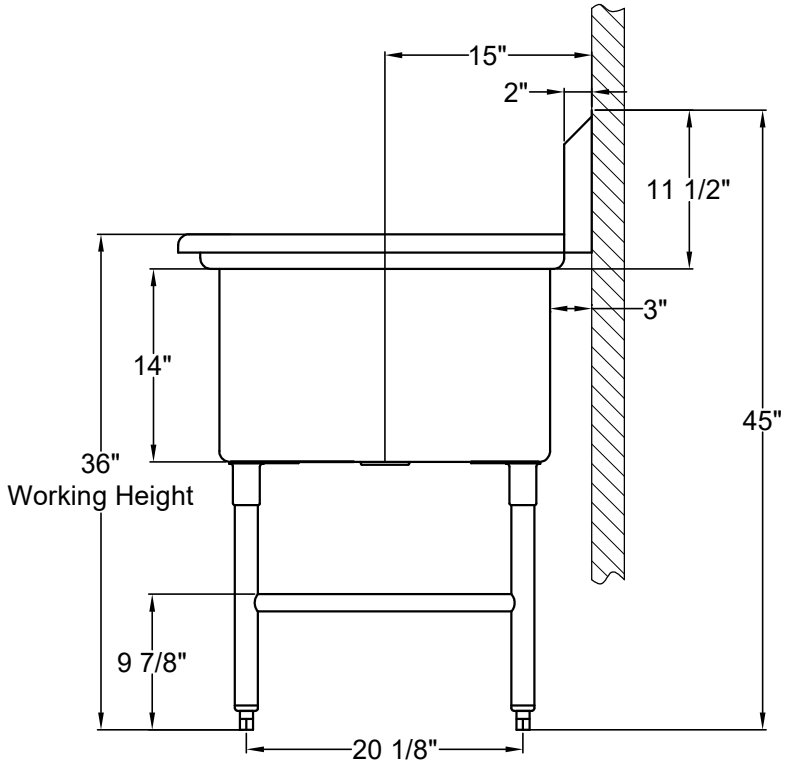

Left Side View