UNDERBAR REFRIGERATION

DBC-22-70 Draft Beer Cooler

Use your smart phone to scan the above QR code to visit our website: www.bk-resources.com

DBC-22-70

- **Heavy Duty Construction**
  Durable stainless steel top & interior with a corrosion resistant black vinyl exterior.
- **Electronic control system**
  Allows for quick temperature adjustments and defrost frequency.
- **Eco-Friendly Hydro-Carbon Refrigerant**
  R290 Refrigerant with a nominal global warming potential rating.
- **Easy Access Condenser**
  Allows for easy service, even in tight spaces.
- **Holding Temp Range: 33°F to 41°F**
- **LED Interior Lighting**
- **Self Closing Doors with Locks**
  Self closing swinging solid doors with a 90° stay-open feature.
- **Comes with 4" swivel casters**
- **1 Year Parts & Labor Warranty**
- **3 Year Compressor Warranty**
- **40" Tall Cabinet, with Tap 56"**

115/60/1
Nema-5-15P

Commercial Use Only - Not warranted for residential use

Specifications subject to change without notice

Part Number	Doors	Towers	Taps	Kegs (1/2 Keg/50L)	AMPS	HP	Voltage	Nema Plug	Cord Length	Unit Size (in) (w x d x h)
DBC-22-70	2	2	2	2	3.6	1/5	115/60/1	5-15P	8 Foot	69" x 27.75" x 40"

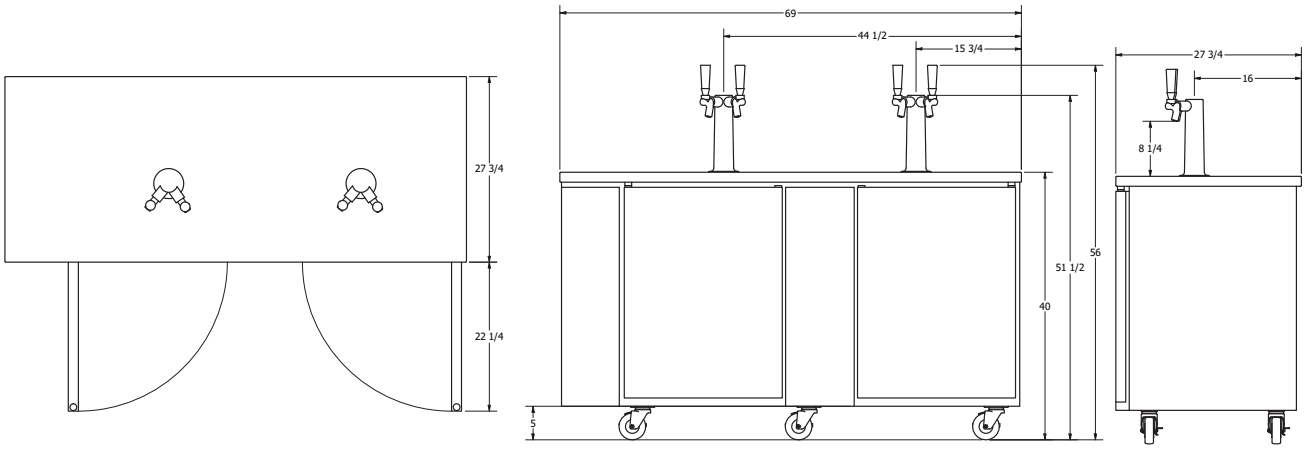

PRODUCT DATA SHEET

BK RESOURCES

Phone: 888-310-4393 | Fax: 888-310-4394 | Website: www.bk-resources.com | Email: sales@bk-resources.com