SERV-WARE SELECT SERIES

Range With Standard Oven

Item #
Project :
Qty :

Model No. SS-SGR-6B

GAS

SS-SGR-6B

Features:

- 1-year parts and labor warranty.
- Stainless steel panel and sides.
- 12" x 12" cast iron top grates designed for easy movement of pots across top sections.
- Deflectors to direct waste to crumb/drip pan.
- Large front panel, promoting safety and great functionality.
- Chrome plated injected aluminum knobs providing for better toughness and durability.
- Easily removable stainless steel crumb/drip pan.
- Oven with snap action thermostat from 210°F to 550°F and 100% safety shut off.
- 26 1/2" Standard bakery depth on all ovens.
- Double-sided enamel oven cavity (Exterior and interior top,bottom, and side).
- Heavy-duty oven wired rack - 1/8" diameter.
- The standard oven has 3 shelf positions and 1 rack.
- Counterweight balanced doors.

100% manufactured from raw materials to provide the best cooking experience, a high standard of quality, and the highest durability in its class to meet the needs of a commercial kitchen.

Warranty Info:

One Year

- Parts & Labor on entire unit.
- Valid in United States.
- Valid for commercial use only.

1 YEAR PARTS WARRANTY 1 YEAR LABOR

CLASSIFIED UL EPH

c UL us LISTED

Conforms to UL471, CSA C22.2 and NSF 7 Standards.

Phone:(800).768.5953
Fax:(800).976.1299

www.servware.com

Copyright © 2021 Serv-Ware Products LLC.

SS-SGR-6B Range With Standard Oven

SERV-WARE SELECT SERIES

Item #
Project :
Qty :

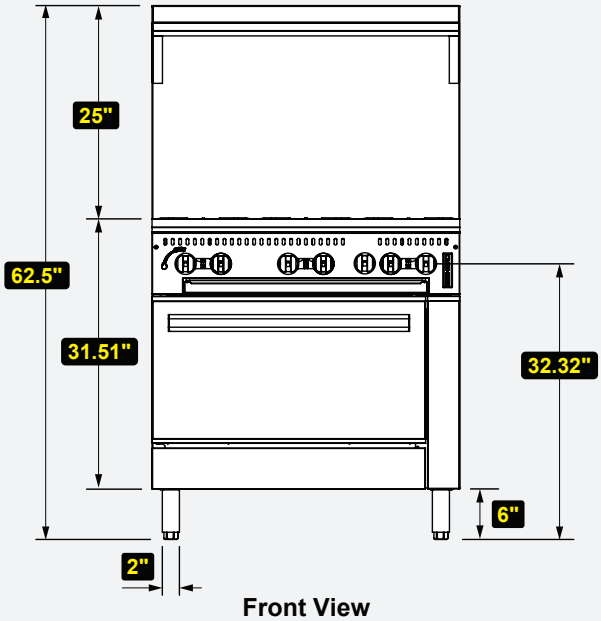

Front View

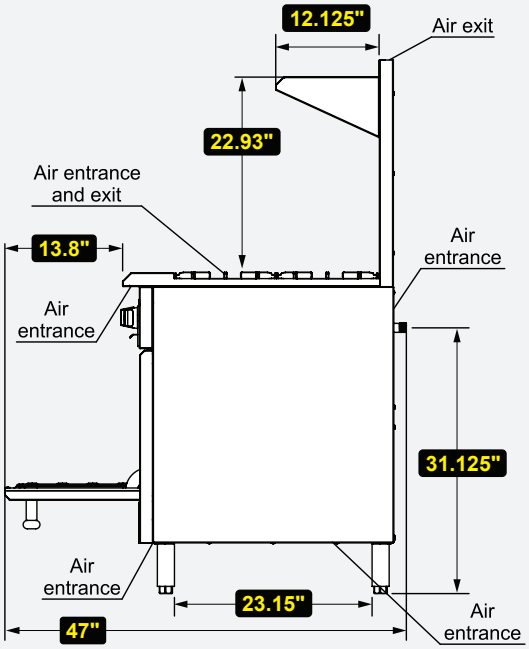

Side View

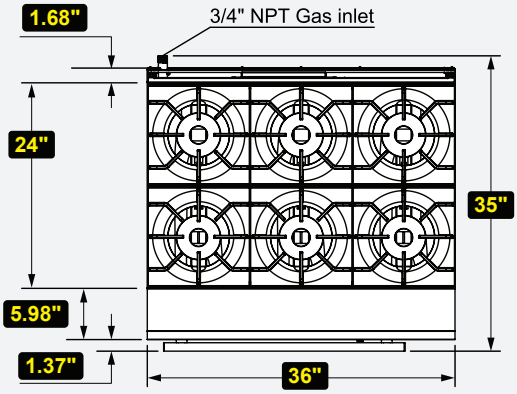

Top View

Technical Information:

MODEL #	DESCRIPTION	DIMENSIONS	WEIGHT/LBS.
		(W x D x H)	(Shipping)
SS-SGR-6B	Range With Standard Oven	36" W x 35" D x 62.5" H	529 lbs.

CONSTRUCTION
Stainless Steel, Front, Door & Sides
Cast Iron Grates
Heavy-duty Cast Iron Burners
Double-sided Enamel Oven Cavity

COOKING	
Temperature Range	210°F – 550°F
Total BTU/H	185,000
	.

CLASSIFIED UL EPH

c UL us LISTED

Prop. 65 Warning for California Residents
WARNING: This product may contain chemicals known to the State of California to cause cancer, birth defects, or other reproductive harm.

SERV-WARE SELECT SERIES

Copyright © 2021 Serv-Ware Products LLC.

Phone:(800).768.5953
Fax:(800).976.1299
www.servware.com

SERV-WARE™ Warranty

SGR Series - Gas Ranges

Notify carrier of damage! Inspect all components immediately.

*Serv-Ware Products warrants to the original owner/user that any piece of gas cooking equipment manufactured shall be free of defects in material or workmanship, under normal use and maintenance, for a period of one (**1**) year from the original installation date or a maximum of eighteen (**18**) months after the shipment date from Serv-Ware Products. Proper installation and start-up in accordance with the instruction manual supplied will be taken into consideration when evaluating the warranty on the specified equipment. Labor warranty charges are valid in the United States only.*

The labor warranty shall include standard labor charges at the product location only. The end user is responsible for any emergency, overtime, or long-distance travel charges. Any labor service required to fulfill the warranty obligation must be performed by a qualified gas appliance service company and accepted by Serv-Ware Products. Billing will be handled between the service company and manufacturer directly, there will be no compensation for charges not billed to Serv-Ware Products by the service company. Serv-Ware Products reserves the right to have any warranty "failed" parts returned to the factory for inspection before agreeing to covering the above stated warranty labor charges

This warranty does not include parts & labor coverage resulting from:

- **External electrical power failure or improper supply voltage to product.**
- **Adverse operating conditions for the product.**
- **Failure to clean and/or maintain the product.**
- **Standard wear & tear items.**
- **Failure to maintain a proper gas supply pressure.**
- **Improper conversion practices (natural gas to propane).**
- **Damage that is caused by employees or customers.**
- **Any part or assembly that has been altered, modified, or changed.**
- **Equipment usage in a residential or non-commercial setting.**
- **Calibration adjustments.**

LIMITATION OF LIABILITY AND OTHER WARRANTIES

Serv-Ware Products assumes no liability for misuse or inadequate maintenance of the Product. ***In no event shall the user by entitled to recover incidental or consequential damages. Including but not limited to; damages for inconvenience, food loss, rental or replacement equipment, loss of profits, or other commercial loss.*** *Warranties stated above are the only warranties made in connection with the sale and distribution of the Products. ANY AND ALL OTHER EXPRESSED STATUTORY AND IMPLIED WARRANTIES APPLICABLE TO THE PRODUCT INCLUDING, WITHOUT LIMITATION, ALL IMPLIED WARRANTIES OF MERCHANTABILITY AND FITNESS FOR USE ARE EXPRESSLY DISCLAIMED. The warranty information set forth above shall be governed by and construed in accordance with the laws of the State of North Carolina and, if applicable, the laws of the United States of America. The warranty, as stated, is extended only to the original owner/user and is not assignable. Serv-Ware reserves the right to change product specifications without notice due to constant product improvement.*

Copyright © 2019 Serv-Ware Products Inc.