BLAST CHILLER/SHOCK FREEZER REACH-IN, SELF-CONTAINED

VBCF-8-70U

- 3 Year Parts & Labor Warranty Plus an Additional 2 Year Compressor Warranty
- Exclusive 2 Year Warranty on Santoprene Door Gaskets

VICTORY ULTRASPEC®

STANDARD FEATURES

- Soft and Hard, Timed or Core Probe Blast Chilling
- Soft and Hard, Timed or Core Probe Shock Freezing
- Automatic Recognition of Core Probe
- Multi Point Sensor Temperature Display Button
- Core Probe Heater Button
- HACCP Alarm Display Button
- Pre-Cooling Cycle Button
- Adjustable Evaporator Fan Speed Button
- Timed Manual Defrost Button
- Infinity Mode Program with Adjustable Set Point
- Automatic Conservation Mode at End of Cycle
- On Board Recipe Book with 68 Pre-Set Programs
- 99 Free Memory Positions for Custom Programs
- LCD Illuminated Temperature Display
- Real Time Clock
- RS 485 Connection
- One, High Precision Single Sensor Probe
- Adjustable Stainless Steel Feet



VBCF-8-70U

OPTIONS & ACCESSORIES

- Printer Kit or USB Data Recorder/Interface
- UV Sterilization Lamp
- Single Sensor Probes (up to 4 possible)
- Casters with Brakes
- Change Door Swing

3779 Champion Blvd—Winston-Salem, NC 27105
PH: (888) 845-9800 - Fax: (800) 253-5168
sales@victoryrefrigeration.com www.victoryrefrigeration.com

VBCF CABINET CONSTRUCTION

Stainless steel AISI 30418/10 exterior and interior. Die-formed interior floor has rounded corners and central drain for easy cleaning. High density foamed in place CFC and HCFC free expanded polyurethane insulation (3.15” thick). Anti-condensation perimeter heating around door opening. Non toxic epoxy coated evaporator coil. One, high precision singlesensor core probe and adjustable stainless steel legs are standard.

VBCF DOOR CONSTRUCTION

Ergonomic vertical door handle and stainless steel AISI 304 18/10 construction. Snap in place magnetic gaskets Self closing doors with hold open stop at 100°.

VBCF REFRIGERATION SYSTEM

The self-contained refrigeration system uses R404A refrigerant and features a hermeti-cally sealed compressor with overload protection. An evaporator fitted with a high flow rate fan insures maximum cooling efficiency. Indirect air flow assures highest product quality. Manual defrosting with door open on a timed cycle.

VBCF INTERIOR STORAGE ARRANGEMENTS

Stainless steel wire guide rack allows for maximum air circulation and can be easily removed without tools for cleaning. See specific model character-istics for pan capacity (number of pans and sizes). Pans not included. Spacing between pans is on 2.56” centers. Unit will hold (8) 18” x 26” or (8) 12” x 20” pans.

VBCF ELECTRONIC CONTROL SYSTEM

Electronic control with LCD/color display insures precise control of Blast Chilling (194° F to 37° F in 90 Minutes) or Shock Freezing (194° F to 0° F in 240 Minutes) Cycles. One touch hard and soft auto-matic blast chilling or shock freezing cycles based either on core probe temperature or timed cycle. Auto-matic recognition of the core probe and automatic conservation mode at the end of a cycle. One touch display of HACCP Alarms (power failure, cycle time out of HACCP required time, high temp, low temp) recorded in memory. The real time clock provides date, time, and duration of HACCP alarms (power failure, cycle time out of HACCP required time, high temp, low temp) recorded in memory. Will record up to 10 alarm events before over writing the first alarm and will keep the data for a minimum of 48 hours in case of a power failure. On board program memory holds 99 total cycles (68 factory pre-set recipes, up to 31 custom programs). Adjustable Evaporator Fan Speed button allows for regulation of the fan during the blast chilling or shock freezing cy-cle. Compressor protected by overload cut-out with automatic reset. Micro-switch control cuts out the evaporator fan and compressor whenever the door is opened.

CHARACTERISTICS	VBCF-8-70U
Width, Overall (in.)	33.5
Depth, Overall (in.)	33.5
Height, Overall (with legs, in.)	52
Depth, Door Open 90°	65.4
Clear Door Height (in.)	24.8
Clear Door Width (in.)	28.7
Internal Depth (in.)	20.1
Wall Thickness (in.)	2.4
Sheet Pan Capacity	8
Size of Pans	18x26 or 12 x 20
Centers Between Pans (in.)	2.56
Chilling Capacity in 90 min (lbs.)	70
Freezing Capacity in 240 min (lbs.)	40

ELECTRICAL DATA	
Cabinet Voltage	208-240/60/1
NEMA Plus	6-15P
Total Amperes	10.1
Horse Power	1 HP

REFRIGERATION DATA	
Refrigerant	R404A
BTUH	6435
Climate Class	T

CRATED DIMENSIONS	
Crated H x W x D (in.)	60X37X37
Crated Weight (lbs.)	414
Uncrated Weight (lbs.)	328

VBCF Evap. Temp -10° F, Ambient Temp. 90° F

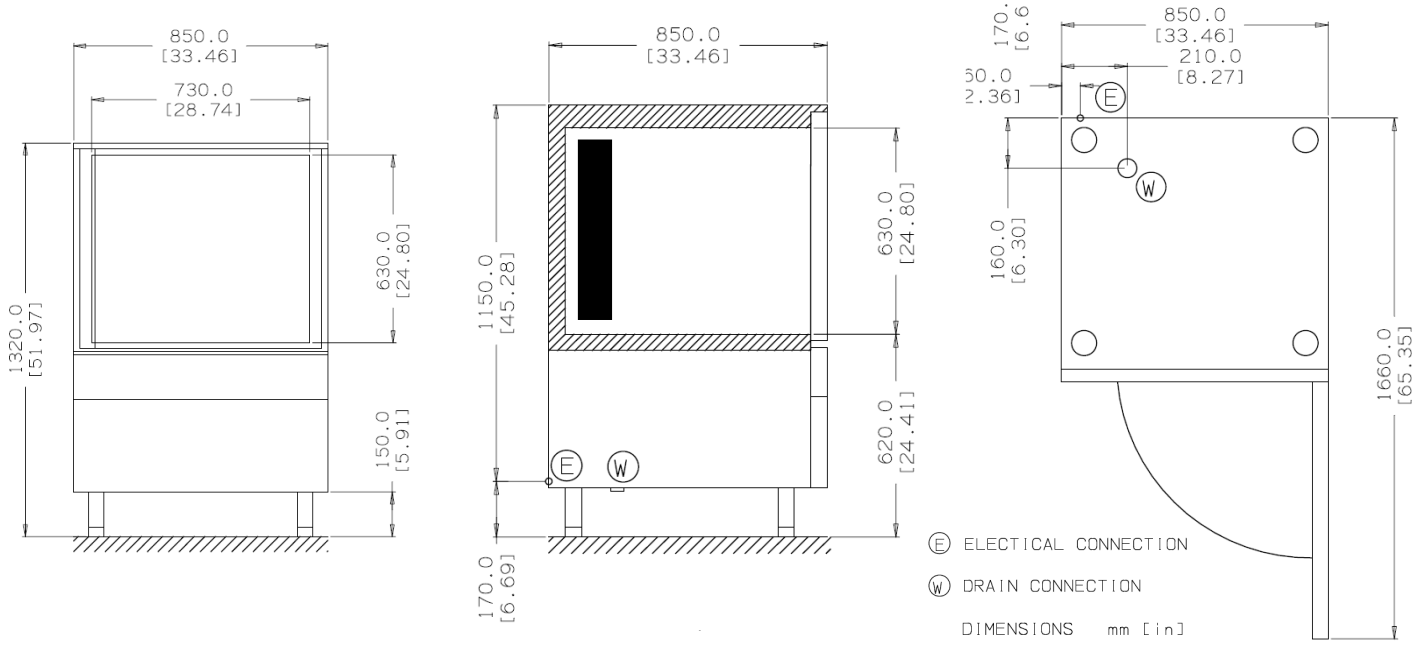

We reserve the right to change specifications and product design without notice. Such revisions do not entitle the buyer to corresponding changes, improvements, additions or replacements for previously purchased equipment.